ORDER NO. VRD-8202-048

Service Manual

Color Video Camera

PK-802

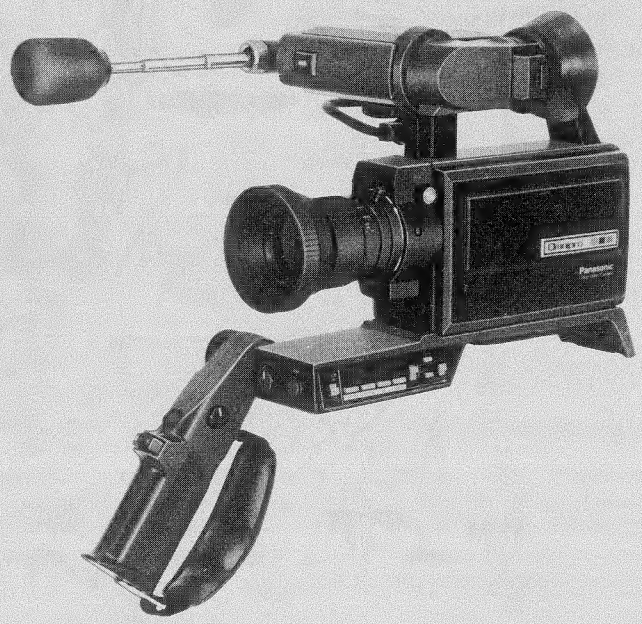

Vol. 1	Vol. 2	Vol. 3	Vol. 4	Vol. 5
Summary Technical Descriptions	*Troubleshooting Guide Adjustment Procedures*	*Block Diagrams*	*Schematic Diagrams*	*Exploded Views Replacement Parts List*

Panasonic®

Panasonic Company
Division of Matsushita Electric
Corporation of America
One Panasonic Way, Secaucus,
New Jersey 07094

Panasonic Hawaii Inc.
91-238 Kauhi St., Ewa Beach
P.O. Box 774
Honolulu, Hawaii 96808-0774

Panasonic Canada
Division of Matsushita Electric
of Canada Limited
5770 Ambler Drive, Mississauga,
Ontario, L4W 2T3

Panasonic Sales Company,
Division of Matsushita Electric
of Puerto Rico, Inc.
Ave, 65 De Infanteria, KM 9.7
Victoria Industrial Park
Carolina, Puerto Rico 00630

ORDER NO. VRD-8202-048

Service Manual

Color Video Camera

Vol. 1

PK-802

Summary Technical Descriptions

SPECIFICATIONS:

Power Source:	DC 12V ± 10% AC 120V ± 10%, 60Hz ± 0.5% (with Power Supply Unit)
Power Consumption: **(with E.V.F)**	DC 5.8W at 12V DC (Battery) DC 1.2W at standby
Special Tube System:	2/3″ frequency separation single tube system (built-in stripe filter)
Single Carrier Frequency:	4.3MHz
Focus System:	Electro-static type
Lens Mounting:	Built-in zoom lens (not "C" mount)
Lens:	6:1 zoom lens with auto/manual iris control. Auto zoom lens and macro construction F: 1.4, f: 12mm—72mm d: 1.0m to infinity
Lens Diameter:	49mm
Light Sensitivity:	Minimum light intensity on optical image: 40 Lux (F: 1.4) Optimum light intensity on optical image: 900 Lux
Video Output Level:	1.0Vp-p, 75Ω (M type coaxial connector) (Standard NTSC signal)
Sync. System:	Internal Sync: RS-170
Signal to Noise Ratio:	More than 45dB
Horizontal Resolution:	More than 270 lines
Color Temperature Control:	2 step switch (indoor/outdoor) & auto adjust
Microphone:	Condenser Microphone
Audio Output Level:	−20dB, Hi-impedance
Audio Output Impedance:	High impedance (1KΩ)
External Microphone Input Impedance:	600Ω unbalanced
Electronic Viewfinder:	Monochrome 1 inch CRT
Operating Temperature:	5°C to 35°C
Operating Humidity:	10% to 75%
Operating Position:	Normal position only
Weight:	Camera Head with E.V.F. 5.1 lbs (with lens, 7ft. cable & shoulder pad/handle grip) AC adaptor (option) 2.4 lbs
Dimensions:	Camera Head with E.V.F. 8.3″(W) × 8.7″(H) × 11.2″(D) 208mm(W) × 218mm(H) × 282mm(D) AC adaptor (option) 3″(W) × 3″(H) × 6″(D) 80mm(W) × 75mm(H) × 149mm(D)

Weight and dimensions shown are approximate.
Specifications are subject to change without notice.

Panasonic

Panasonic Company
Division of Matsushita Electric
Corporation of America
One Panasonic Way, Secaucus,
New Jersey 07094

Panasonic Hawaii Inc.
91-238 Kauhi St. Ewa Beach
P.O. Box 774
Honolulu, Hawaii 96808-0774

Panasonic Canada
Division of Matsushita Electric
of Canada Limited
5770 Ambler Drive, Mississauga,
Ontario, L4W 2T3

Panasonic Sales Company,
Division of Matsushita Electric
of Puerto Rico, Inc.
Ave, 65 De Infanteria, KM 9.7
Victoria Industrial Park
Carolina, Puerto Rico 00630

CONTENTS

FEATURES 1-1
ACCESSORIES 1-1
PRECAUTIONS 1-2
OPERATING COMPONENTS AND THEIR FUNCTIONS 1-3
CONNECTION DIAGRAM 1-7
MOUNTING THE CAMERA ON THE TRIPOD 1-8
OPERATING PROCEDURE 1-9
DESCRIPTION OF FADE FUNCTION 1-10
USING THE REMOTE CONTROL FUNCTIONS 1-11
DISPLAYS ON THE ELECTRONIC VIEWFINDER CRT 1-12
BEFORE SERVICING 1-15
GENERAL DESCRIPTION 1-17
(1) Special Tube 1-17
(2) Gamma 1-21
(3) Stripe Filter 1-22
(4) Correction Circuits 1-28

FEATURES

Electronic viewfinder
The electronic viewfinder allows you to see exactly what the camera lens sees. Inside the viewfinder there is one LED indicating insufficient light intensity, one LED for indicating VCR remote control status and one LED for white balance control status.

Camera Remote Control
VCR functions (PLAY/PAUSE,CUE,REVIEW, SLOW/F.ADV,INSERT) can be controlled from the camera which incorporates the microcomputer system.

Electronic Viewfinder Display
Title, stopwatch, battery, tape counter and fade-in/fade-out can be displayed on the Viewfinder. Also, title and stopwatch can be recorded.

Zoom lens with Power zoom and MACRO function.
6:1 zoom lens with Power zoom allows you to "zoom-in" for a closer picture. This is simply done by pressing the Power zoom switch. Also, close-up pictures can be obtained by using MACRO function.

Automatic iris control
Automatic iris control adjusts the amount of light entering the camera to provide the proper picture contrast.

Automatic white balance control
Optimum color pictures can be achieved under varying lighting conditions.

Boom microphone
Sound as well as pictures can be recorded at the same time because the camera contains a built-in microphone that can also be extended to pick up sounds more distinctly.

Standby switch
The standby switch is for saving battery power when the recording is in the pause mode for a long period.

Negative-positive reverse switch
Negative color films can be viewed in normal color conditions by using the optional Adaptor.

Fader switch
The picture automatically fades in or fades out every time you push the VCR remote control switch.

ACCESSORIES

Accessories included:

Standard accessories (supplied)
Camera Unit (PK–802) ..1pc.
Electronic Viewfinder (PK–M054) ..1pc.

Optional accessories

10-pin extension camera cable (20H-20F)
AC Adaptor (PK-A789) with 3 cables
Film transfer Adaptor (PK-F35)

PRECAUTIONS

x Do not attempt to disassemble the camera or power supply. In order to prevent electric shock, do not remove screws or covers.
There are no user-serviceable parts inside.

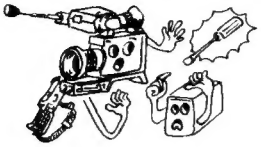

x Do not abuse the camera. Avoid striking, shaking etc. The camera contains a sensitive pick-up tube which could be damaged by improper handling or storage.

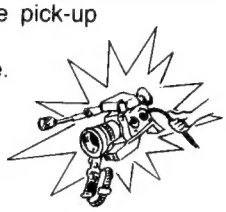

x Do not let the lens remain uncapped when the camera is not in use.

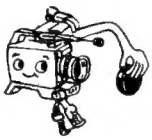

x Do not touch the surface of the lens with your hand.

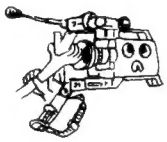

x Do not use strong or abrasive detergents when cleaning the camera body.

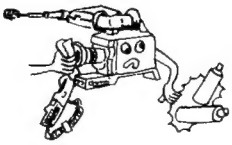

x Do not aim the camera toward the sun or other extremely bright objects,whether it is turned on or not. This action could permanently damage the pick-up tube.

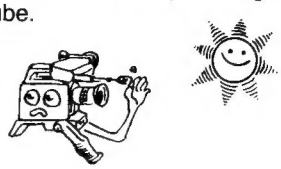

x Do not expose the camera or power supply to rain or moisture, or try to operate it in wet areas. Do not operate the camera or power supply if it becomes wet.

x Do not use the camera in an extreme environment where high temperature or high humidity exist.

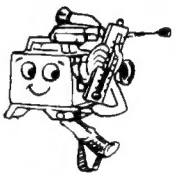

x Do not try to operate the camera and power supply on power line voltages other than 120V AC at 60Hz.

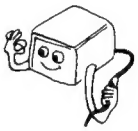

x Do not leave the camera and power supply turned on when not in use.
Do not turn the power on and off repeatedly without use.
Do not block the ventilation slots.

x Do not store the camera under conditions where temperatures are over 122°F (50°C)

OPERATING COMPONENTS AND THEIR FUNCTIONS

A. Camera Head

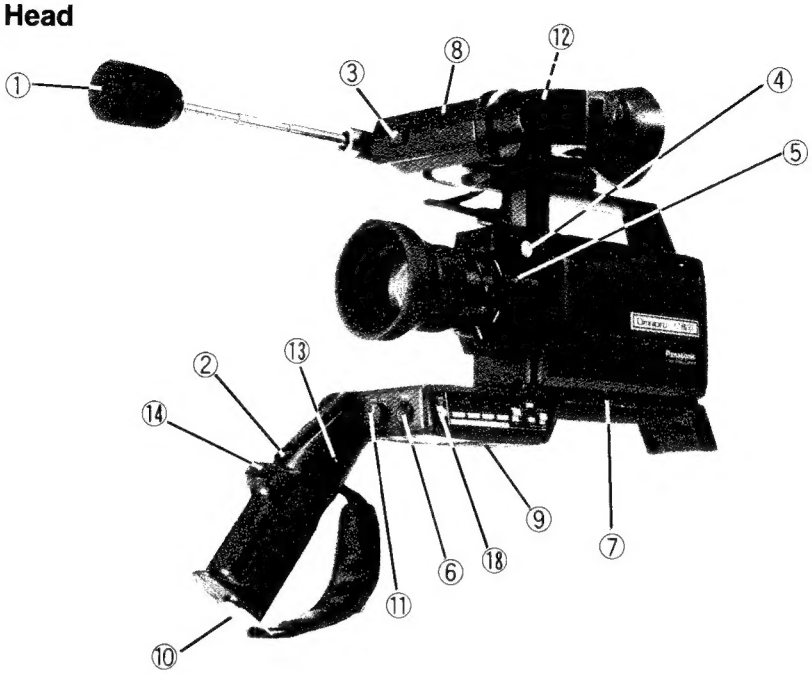

① **Boom Microphone**
To record audio while the picture is recorded. Extend out the boom microphone to pick up sounds more distinctly when recording.

② **VCR Pause Switch (pause trigger)**
The trigger operated switch is used to place the VCR in the pause mode while focusing or adjusting the camera or simply changing the scene to be recorded.

③ **Tally Light (VCR remote control status LED)**
The tally light (red) flashes while recording so that person before the camera can recognize that recording is actually in progress.

④ **Auto/Manual Iris Control Switch**
This switch selects the lens iris control for MANUAL or AUTO operation.
(1) When this switch is pushed in the auto-iris automati-cally adjusts the lens opening or aperture to admit the proper amount of light for the camera.
(2) When this switch is pulled out the lens iris can be manually adjusted.

⑤ **Color Temperature Correction Switch (Filter selection)**
Optimum color pictures can be achieved for varying light conditions.
This switch selects the approximate corrections for indoor or outdoor usage.
Set to " ☼ " for outdoor use and set to " ☃ " for indoor use.

⑥ **Automatic White Balance Control (A.W.C.) Switch**
The camera has an Automatic White Balance Control circuit. White balance ia automatically set by pushing the A.W.C. switch, after making the proper selection with the color temperature correction switch. Also the A.W.C. indicator on the EVF glows green when the white balance is set.
It is recommended that the A.W.C. switch is re-pushed to adjust the white balance whenever the scene is changed.

⑦ **VHS Compatibility Switch**
Permits use of this camera with most other VHS portable recorders and is preset to the "⊕RUN" position. If when using other VHS portable recorders, the START/STOP switch on the camera operates in the reverse manner, place the camera in the standby position and place the compatibility switch in the "RUN⊖" position. Slide the shoulder pad backward to gain access to this switch.

⑧ **Electronic Viewfinder**
This is a TV monitor which shows the actual picture in black and white that the lens sees.
This Electronic Viewfinder is attachable to either side of the camera head considering right or left hand operation.

a) Light intensity indicator
This indicator consists of one LED that, when illuminated, indicates insufficient light for producing a quality picture. The camera has an Automatic Iris Control Circuit. It makes sure that the iris is opened for proper exposure and under sufficient light conditions,turning off the orange light. Therefore, when the orange light is on, the light intensity is insufficient. Provide more illumination.

b) A.W.C. Indicator (Automatic White Balance Control)
This indicator is a two-color LED which is used with the Automatic White Balance Control. The LED glows RED when the camera is turned on. This means that the white balance hasn't been set yet. Before you are ready to shoot – press the A.W.C. button. While the white balance is automatically being adjusted – the LED flashes RED – GREEN – RED – GREEN, etc. The LED will glow GREEN when the white balance is set. Set A.W.C. again if the lighting is changed.

c) VCR pause indicator
This green indicator is on when the recording is in progress.

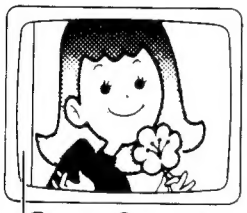

Light intensity indicator (orange LED)
A.W.C. Indicator (two color display LED)
VCR pause indicator (green LED)
Fade indicator (White bar)

d) Fade-in/out indicator
White bar appears on the left side of the EVF when setting the Fader switch to the "ON" position.

⑨ **Tripod Mounting Hole**
This hole is used for mounting the camera on a tripod with standard 1/4-20 thread.

⑩ **Holder Pod Mounting Hole**
This hole is used for a holder pod.
This hole should not be used to mount the camera on a tripod.

⑪ **Color Control Knob**
The red and blue color are balanced and preset at the center (detent) position which usually will provide accurate color reproduction. When used indoors, the color balance control can be adjusted while viewing a color TV.

⑫ **Picture turning switch**
This switch is used to invert the picture on the EVF and should be switched only with power off.

(1) Set to the "R" position for right hand operation.

(2) When the EVF is mounted for left hand operation, the viewfinder picture is upside down. Accordingly set to the "L" position so that the picture on the EVF can be seen in its normal condition. This switch does not affect the picture which is recorded.

⑬ **Power Zoom Speed Control**
This camera has a power zoom lens with variable speed. Adjust the speed to your preference.

⑭ **Power Zoom Switch**
This switch works in conjunction with the zoom lens, and allows you to "Zoom-in" (Telephoto or T position) or "Zoom-out" (Wide Angle or W position) by pressing it.

⑮ **Camera Cable**
This 7 foot long cable is used to provide the interconnections between the camera and portable VCR.

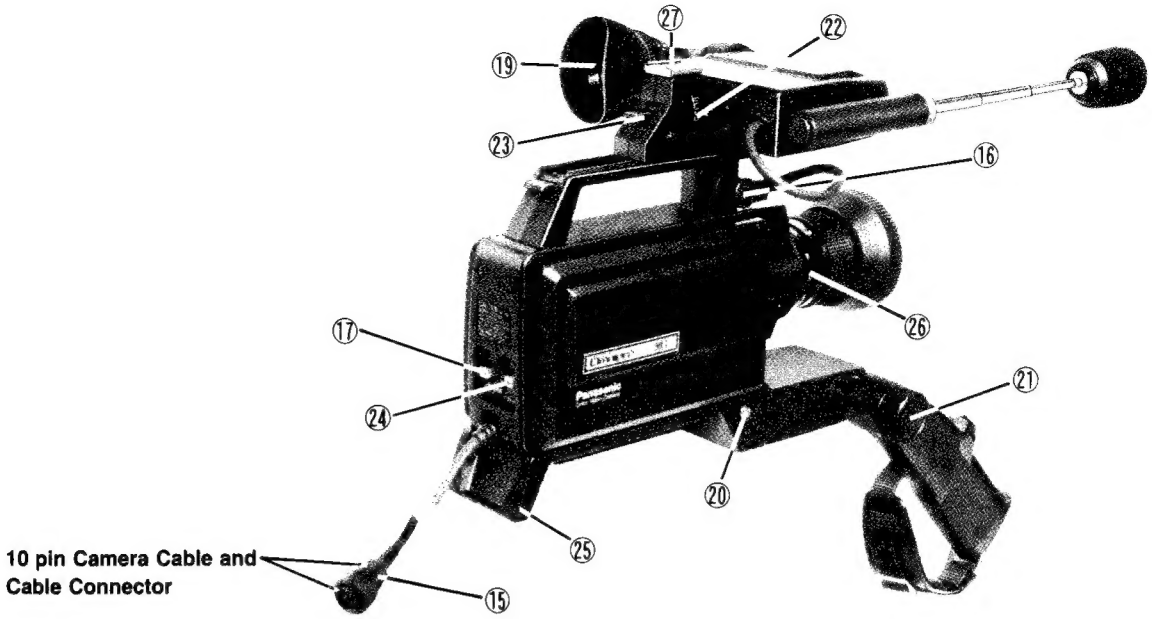

⑯ **Electronic Viewfinder Connector**
This is a receptacle for the connection of the electronic viewfinder.

⑰ **Standby Switch**
This switch is used for longer battery operation. Set this switch to "Standby" when leaving the camera in the pause mode for a long period.
The picture disappears on the Electronic viewfinder when setting this switch to "Standby". When the standby switch is set to "Operate", the camera and portable VCR operate normally.
Also, there are two positions for "OPERATE".
"DISPLAY ON" is for viewing the special displays on the CRT (picture tube).
"DISPLAY OFF" is for inactivating the built-in display circuit.

⑱ **Fader Switch**
This fade-in/out functions in conjunction with the VCR remote control switch on the camera.
When setting this switch to the "ON" position, the picture automatically fades in or fades out every time you push the VCR remote control switch. Fade-in time is approx. 6 seconds and fade-out time is approx. 5.5 seconds.

⑲ **Viewfinder Picture Tube**
The 1" picture tube will show the actual scene the camera "sees" in black and white.

⑳ **External Microphone Input**
Accommodates an external microphone to permit closer audio pick-up. The built-in boom microphone is automatically disconnected when the external microphone is plugged in. Use a microphone with 600 ohm impedance.

㉑ **Adjustable Handle Grip & Knob**
This grip is used for holding the camera and is tiltable for easy holding and operation. The grip should be firmly tightened by turning the Knob.

㉒ **EVF Mounting Roller**
This roller tightens the EVF to the camera head firmly.

㉓ **EVF Lock Lever**
This lever locks the EVF to the camera. Release the lock for sliding.

㉔ **Negative – positive reverse switch**
This switch reverses the video signal. In normal shooting set to the "NORMAL" position. When setting to the "REVERSE" position, negative color films can be seen in normal color conditions. Use the optional adaptor for film installation.

㉕ **Shoulder pad**
This shoulder pad is useful when recording without a tripod and is adjustable for comfortable position.

㉖ **Macro Position**
For close up pictures down to a distance of approx. 1 in. Pull the zoom lever to set the zoom ring to the Macro position.
Note: Make sure the illumination on the subject is sufficient for close up shooting.

㉗ **Accessory Shoe**

B. CONTROL PANEL

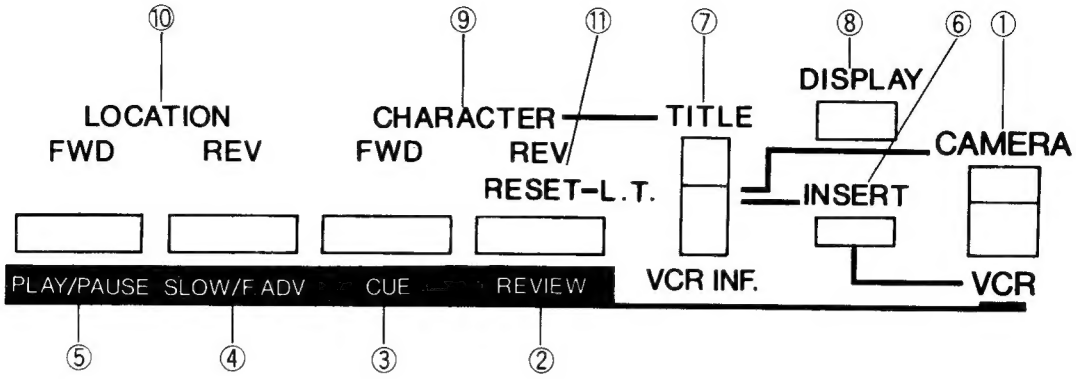

Camera Remote Control

① **VCR/CAMERA selector switch**
This switch determines if the recorder will either be recording or playing.
When the switch is in the "CAMERA" position, the Portable VCR is in the RECORD/PAUSE mode.
When the switch is in the "VCR" position the VCR is in the PLAY/PAUSE mode.

② **REVIEW**
During playback, hold this button down to obtain a reverse motion picture at 5 to 9 times of normal speed, (SLP recordings provide the best results).

③ **CUE**
During playback, hold this button down to obtain a forward motion picture at 5 to 9 times of normal speed (SLP recordings provide the best results).

④ **SLOW/F.ADV**
During playback, press and hold this button to advance frames forward or show slow motion pictures.

⑤ **PLAY/PAUSE**
This button only works when the VCR mode selector switch is in the "VCR" position.
Press this button to release or engage the playback pause mode.

⑥ **INSERT**
This is a editing mode to re-record on the previously recorded tape without interference. You can get a smooth transition between two separate recordings on the same cassette. Press this button for RECORD/PAUSE mode and squeeze the camera trigger to add on the new recording.

Note: Function ② through ⑥ operate only when the VCR/CAMERA selector switch ① is in the "VCR" position. All the above functions are operable with the PV-5000 portable VCR models only.

Displays on the CRT — Picture Tube —

⑦ **Display selector switch**
This switch selects the display on the CRT (picture tube).
- TITLE.....character (alphabet, number, sign)
- L.T. .....stopwatch
- VCR INFORMATION...memory, tape counter, battery

⑧ **DISPLAY**
Press this button to view the displays on the CRT.

⑨ **CHARACTER FORWARD/REVERSE**
Press these buttons to forward or reverse the character sequence after setting the display selector switch to the "TITLE" position.

⑩ **LOCATION FORWARD/REVERSE**
Press these buttons to forward or reverse the location of character after setting the display selector switch to the "TITLE" position.

⑪ **RESET**
The stopwatch reverts to "00:00:00" when pressing this button after setting the display selector switch to the "L.T." position.

CONNECTION DIAGRAM

A: Camera Head and portable VCR

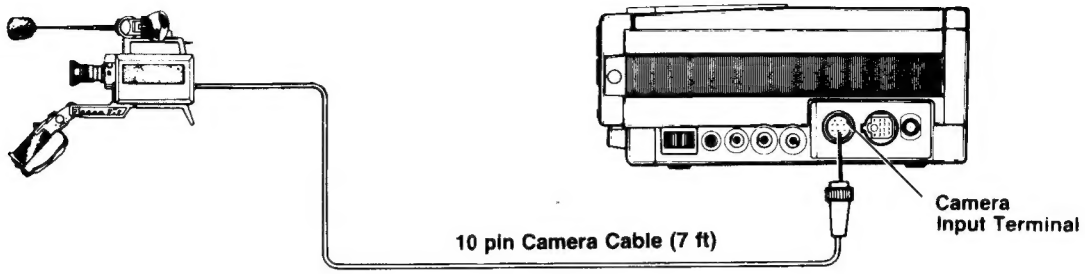

Connect the camera cable to 10-pin socket on portable VCR as illustrated. Be sure to connect the camera to the portable VCR before turning on the power switch on the portable VCR. If the switch is turned on prior to connecting the cable, trouble could develop.

B: Camera Head, optional power supply and VCR without 10-pin connector

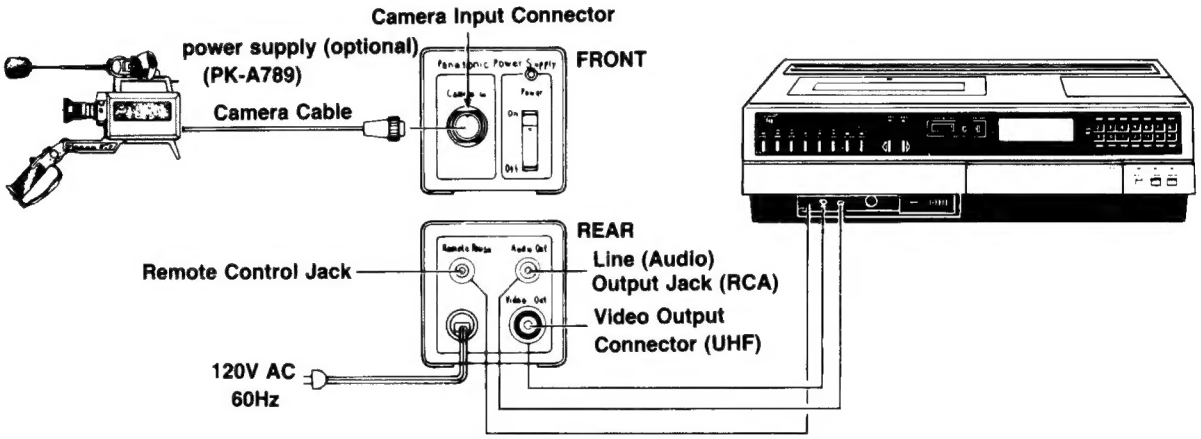

1. Connect the camera cable from the camera head to the 10-pin camera socket on the power supply, (PK–A789). (Make sure that the power switch of the power supply is turned off before connecting the cable.)
2. Connect the video cable from the VIDEO OUT socket (UHF connector) on the power supply to the VIDEO IN connector (RCA phono connector) on the VCR.
3. Connect the audio cable from the AUDIO OUT connector on the power supply to the AUDIO IN connector on the VCR.
4. Connect the VCR remote control cable from the REMOTE connector on the power supply to the REMOTE PAUSE connector on the VCR.
5. Plug the power plug of the power supply into the wall socket (120 Volts).
6. Insert the AC power plug of the VCR into the wall socket.

Notes:

1. The camera cable between camera head and power supply or between camera head and portable VCR can be extended by using the optional extension camera cables.
   (Use three 20 feet extension cables to extend upto 67 feet)
2. The connections between the VCR and TV set are explained in the operating instructions for the VCR.

C: Camera Head and Electronic Viewfinder

1. Attach the Electronic viewfinder to the camera head and tighten the EVF Mounting roller firmly.
2. Plug the connecting cable on the Electronic Viewfinder into the connector on the camera head.
3. Set the picture turning switch to the "R" position.

Note:
The above procedure is for mounting the Electronic Viewfinder for right hand and right eye use.
When mounting the Electronic Viewfinder for left hand and left eye use, unscrew the EVF Mounting roller, flip the viewfinder over and reattach by following the same procedure.
Also, place the picture turning switch in the "L" position but only with the power off.

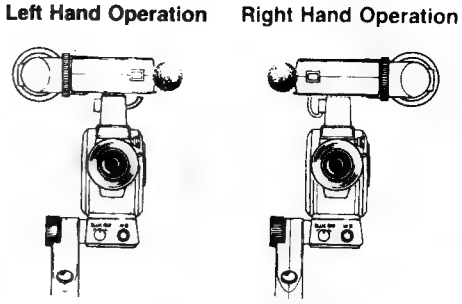

Front View of Camera

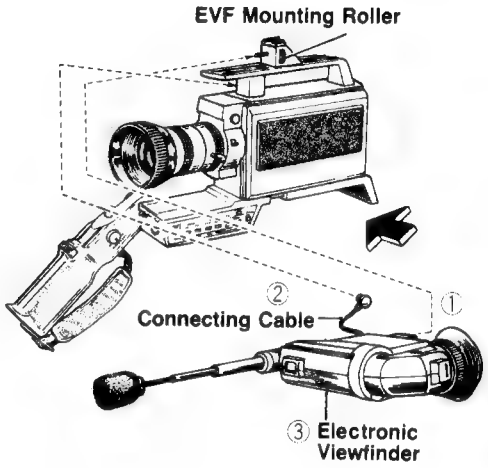

MOUNTING THE CAMERA ON THE TRIPOD

The camera may be attached to a tripod when you wish to make recordings while not holding the camera or if you need to keep the camera very steady while recording.

MOUNTING THE CAMERA ON A TRIPOD
Mount the camera with shoulder pad onto the tripod by screwing the mounting screw on the tripod (standard 1/4"-20 thread) into the mounting hole on the shoulder pad.
Also slide the EVF backward for easy viewing of EVF picture.

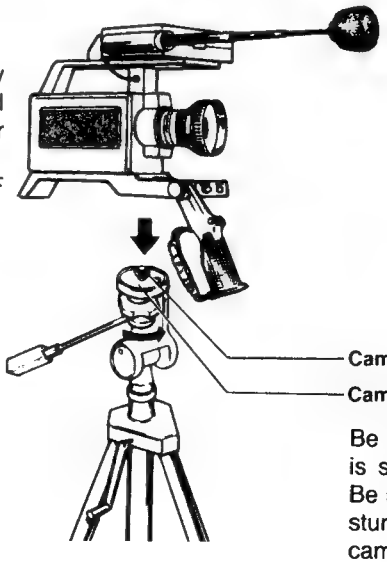

Be sure that the camera is securely fastened.
Be sure that the tripod is sturdy enough to hold the camera.

OPERATING PROCEDURE

1. Connect the camera and portable VCR as previously shown.

2. Remove the lens cap.

3. Turn the power switch of the VCR on, and press the Rec and Play buttons simultaneously.

   • On some VCR models you may have to switch the input selector to the camera position.
   Note: To use the Camera Remote Control.

4. Confirm that the VCR remote indicator (green LED) on the Electronic Viewfinder is turned off. If the green LED is on, depress the VCR pause switch on the camera handle grip. (If the green LED lights, actual recording is being made.)

5. Select the Color Temperature Correction switch for indoor or outdoor use.

6. Set the Standby switch to the "DISPLAY ON" position. For display function and its operation

   Note:
   To save power while preparing to record, it is better to use the STANDBY SWITCH in order to only preheat the pick-up tube of the camera to save battery power.
   Also, to save power during operation, set the Standby switch to the "DISPLAY OFF" position when the displays on the CRT are not necessary and you wish to view the EVF picture only.

7. Confirm that the orange LED indicator is not illuminated. This indicates that light intensity to the camera lens is proper.
   Orange LED on.....need more incoming light.

8. Press the Power Zoom Switch ("T" side) for maximum close-up. Adjust lens focus for the sharpest picture. Focus will now track over the entire zoom range.

9. Aim the camera at a white object (never at a light source). White lens cap may be placed on the lens for outdoor shooting if there is no white object. Push the A.W.C. switch to adjust the white balance. And wait for the A.W.C. indicator on the EVF to glow green.

   Note:
   1. When the camera is first turned on, permit the camera to warm up for approx. 30 seconds before adjusting white balance.
   2. It is recommended that the A.W.C. switch is repushed to adjust the white balance every time a new scene is selected.

10. Depress the VCR pause switch on the camera handle grip.
    The remote pause indicator light will light as the recorder begins to record.

11. Depress the VCR pause switch on the camera handle grip to pause the recorder anytime. Depress the switch again to resume recording.

12. Instant Replay.
    To watch the program just recorded, rewind the tape, then press the Play button. The playback picture appears automatically on the viewfinder of the camera when connected to the portable VCR. When the power supply is used this feature does not function.

13. STANDBY Setting
    Employ the STANDBY switch to avoid unnecessary power consumption when you expect to pause the recording for more than a couple of minutes.

    1. Pause the recording by pressing the VCR pause switch on the camera.
    2. Set the standby switch to the "STANDBY" position during the pause mode.
    3. Set the standby switch to the "DISPLAY ON" or "DISPLAY OFF" position just before recording is resumed.Wait for the viewfinder picture to appear.
    4. Resume the recording by repressing the VCR pause switch on the camera handle grip.

    Please note that video noise during playback may appear on the monitor if you do not follow this procedure. VCR or Camera operations can't be performed when the camera is set to the "STANDBY" position and operating with a portable VCR.

    Note:
    1. Focus should be adjusted all the way at the zoomed-in (telephoto) position. Focus should then track over the entire zoom range. When the camera is aimed at a new scene or object, refocusing will be required.
    2. Always replace the lens cap when the camera is not in use.

DESCRIPTION OF FADE FUNCTION

● **Fade IN/Fade OUT**

When the Fader Switch is ON:
1. The picture will "fade in" everytime the camera trigger is squeezed to start recording.
2. The picture will "fade out" everytime the camera trigger is squeezed to pause the recorder.

FADE IN

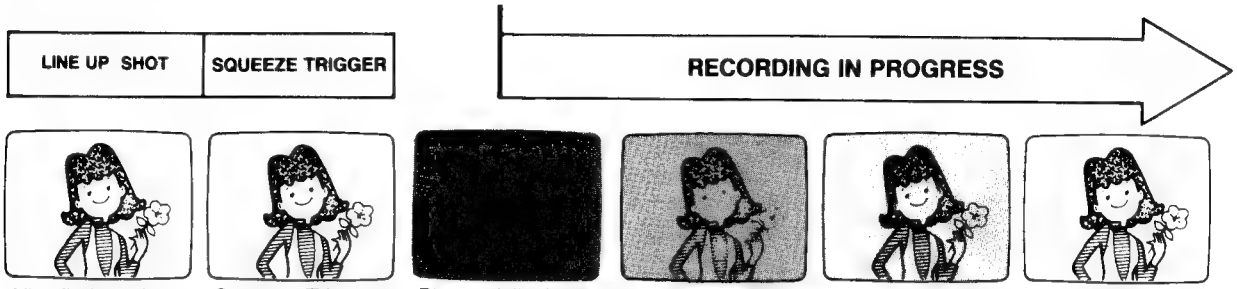

Viewfinder picture for focus adjustment | Squeeze Trigger to record | Picture fully faded-tape starts rolling | PICTURE FADES IN

With the fader switch on, the tape does not start rolling until the picture in the viewfinder is fully faded out. Then tape rolls as the picture fades in.

FADE OUT

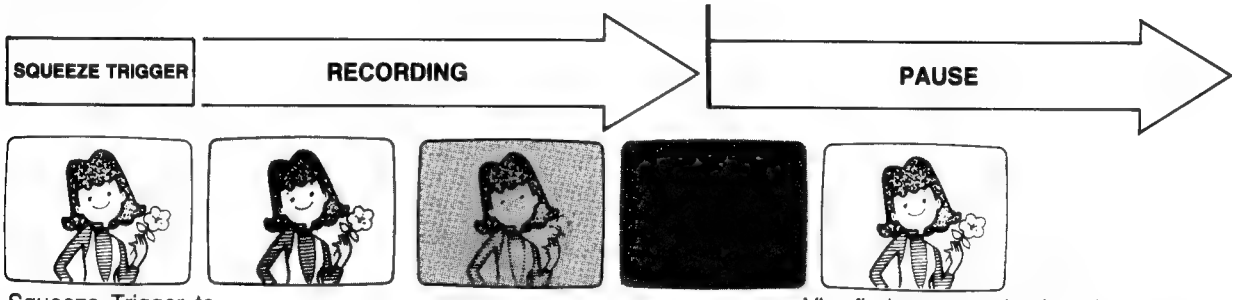

Squeeze Trigger to pause | PICTURE FADES OUT | Viewfinder comes back to line up next shot. Tape is paused.

With fader switch on, the recorder does not pause until the picture has fully faded out. After the recorder pauses, the viewfinder picture returns in order to line up the next shot.

USING THE REMOTE CONTROL FUNCTIONS

When the camera is connected to the portable VCR, VCR functions (PLAY/PAUSE, SLOW/F.ADV,CUE,REVIEW,INSERT) can be controlled from the camera which incorporates the microcomputer system. Also, all playback functions can be viewed in the electronic viewfinder. For these operations, place the camera remote switch on the VCR to the "ON" position.

OPERATION

1. Connect the camera to the recorder.
2. Turn the recorder power "ON"
3. Set the recorder's CAMERA REMOTE switch "ON".

TO RECORD

1. Place the VCR/CAMERA switch in the "CAMERA" position.
2. Use the camera handle grip trigger to engage or release pause.

TO PLAYBACK

1. Place the VCR/CAMERA switch in the "VCR" position.
2. Use the PLAY/PAUSE button to engage or release pause.
3. Use CUE or REVIEW to locate a particular segment.
4. Use SLOW/F. ADV as desired.

TO STOP OPERATION

1. Set the camera remote switch of the recorder to "OFF".
2. Now, VCR rewind or STOP function can be activated.

TO INSERT

If you wish to insert a new video section to a previously recorded tape without erasing the original sound recording,
1. Place the VCR/CAMERA selector in the "VCR" position.
2. Use CUE or REVIEW to find the particular section.
3. Press the "INSERT" button to place the VCR in the RECORD/PAUSE mode (INSERT/PAUSE mode).
4. Squeeze the camera handle grip trigger to add on the new video recording.
5. Use the camera handle grip trigger to engage or release pause.

Note:
1. STANDBY has top priority in any mode.
2. Switching the VCR/CAMERA selector automatically engages the pause mode — giving the user utmost control.
3. If the safety tab of the cassette is missing, no recording can be made.
4. Recordings made in SLP provide the best looking CUE, REVIEW and STILL pictures.
5. If the tape comes to its end while the remote control is used in RECORD/PAUSE mode or INSERT/PAUSE mode — the recorder's power switch will automatically turn off.
6. When the "INSERT" button is pressed and VCR is in the RECORD/PAUSE mode, VCR reverts to PLAY/PAUSE mode when the tape counter reaches "0000" and the Memory switch of the VCR is "ON".
7. Push the INSERT button one more time when you change the standby switch position from the "DISPLAY OFF" to the "DISPLAY ON"during INSERT/PAUSE mode and can't start the new video recording by the camera handle grip trigger.

※ All the above functions are operable with the PV-5000 portable VCR models only.

DISPLAYS ON THE ELECTRONIC VIEWFINDER CRT

When the camera is connected to the portable VCR, the following indications can be made to appear on the CRT. Be sure to set the standby switch to the "DISPLAY ON" position.

1. VCR INFORMATION

Set the display selector switch to the "VCR INF" position.
VCR INFORMATION can't be recorded and is not affected by the VCR/CAMERA selector switch.
VCR INFORMATION can be seen in the Electronic viewfinder.

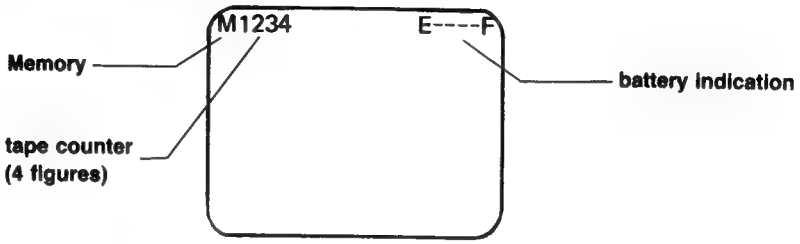

1—1. Tape counter & Memory

Tape counter indicates how far the tape has moved. It is very useful for locating the beginning of programs. Memory and tape counter will be indicated in conjunction with the liquid crystal display counter on the VCR.

1—2. Battery indication

E ---- F
E --- F
E -- F
E F

The battery indicator displays the charge capacity of the battery pack within the recorder. Hyphens between "E" and "F" are extinguished as the charge capacity reduces. The last hyphen flashes just before the VCR turns itself OFF to protect the battery.

2. STOPWATCH

Stopwatch will be displayed on the CRT and can be recorded when the display selector switch is placed in the "L.T." position. Stopwatch starts or stops every time the camera trigger is squeezed so that you can recognize the recording time. Be sure to place the VCR in the RECORD/PAUSE mode by switching the Control Panel CAMERA/VCR switch to the "CAMERA" position. Should you decide not to record the STOPWATCH display, simply push the display button ⑧ on the Control Panel. Pushing this display button again will recall the stopwatch display. The stopwatch display will be recorded when displayed in the Electronic Viewfinder and the green LED pause indicator is lit.

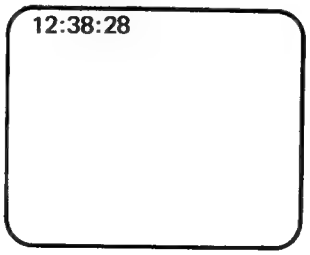

stopwatch display
12 minutes 38 seconds and
$\frac{28}{100}$ seconds

TO RESET

Press the "RESET" switch before starting the recording or when the VCR is in the RECORD/PAUSE mode. Accumulating the stopwatch time is possible unless the "RESET"switch is pressed.

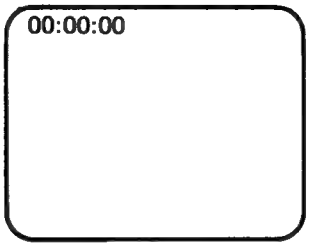

When the stopwatch reaches "59:59:99", it reverts to "00:00:00".

3. TITLE

You can produce your own titles by placing the display selector switch in the "TITLE" position.
Titles can be recorded. Be sure to place the VCR in the RECORD/PAUSE mode (Control Panel Camera position).
60 compartments are supplied as shown below.

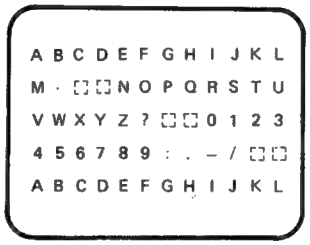

Sequence of characters (alphabet, number, sign)

When the display selector switch is set to "TITLE" position, the letter "A" appears first at the left side corner of the upper portion as shown.

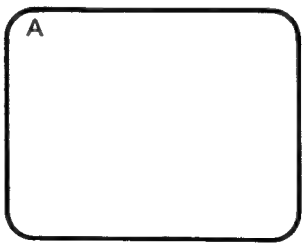

TO FORWARD THE LOCATION

Press the "LOCATION FORWARD" button to forward the location. When the character reaches the right side corner at the bottom of the CRT, the character reverts to the "starting point".

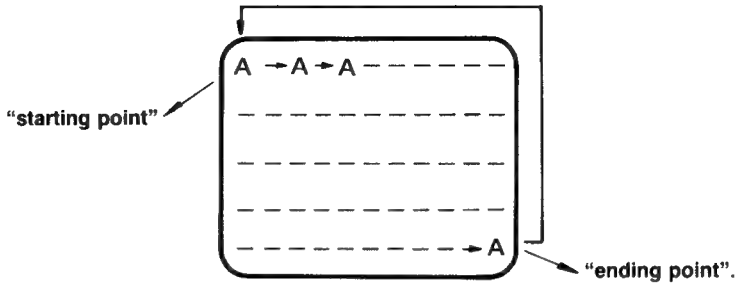

TO REVERSE THE LOCATION

Press the "LOCATION REVERSE"button to reverse the location.

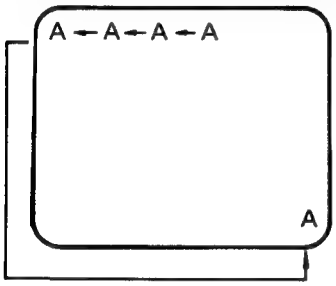

When the character returns to the "starting point" the character moves to the "ending point" as shown.

TO CHANGE THE CHARACTER

Press the "CHARACTER FORWARD" button or "CHARACTER REVERSE" button to forward or to reverse the character sequence.
These two buttons do not change the location of the character.

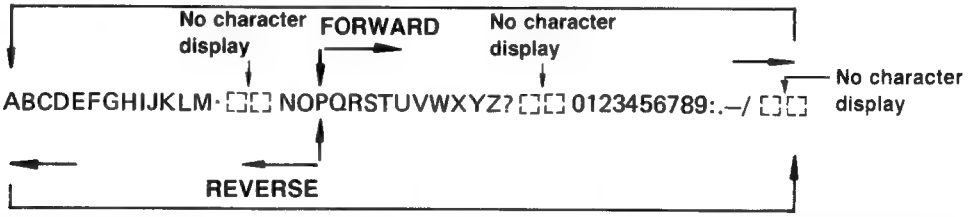

For instance, in case the character "P"is being displayed, "Q" appears on the CRT when the "CHARACTER FORWARD" button is pressed. Also, "O" appears when the "CHARACTER REVERSE" button is pressed.
In this way, everytime the "CHARACTER FORWARD" or "CHARACTER REVERSE" button is pressed, the character will be changed in sequence.
When the character reaches the last during FORWARD, it returns to the "A".
Also,when the character reaches the "A" during REVERSE it returns to the last.

Note:

1. While producing a title, once the display selector switch is set to the position other than "TITLE" position, or when the standby switch is set to "STANDBY" or "DISPLAY OFF", or when the VCR/CAMERA selector switch is set to "VCR" position, all the characters on the CRT will be erased.
2. "LOCATION FWD" button, "LOCATION REV" button, "CHARACTER FWD" button and "CHARACTER REV" button are push-push type. Press and hold these buttons to gain quick access to the desired location or character.
3. If you change the standby switch position to the "DISPLAY ON" from the "DISPLAY OFF" during recording or playback, VCR becomes pause mode and stopwatch reverts to "00:00:00".

BEFORE SERVICING

Condition	Main Cause and Remedy
No picture	● Check if the Power Supply is plugged in (in case the Power Supply is being used). ● Check if the Standby switch is set to the "Operate"position. ● Check if the VCR power switch is on – and the battery is charged. ● Check if the lens cap is on. ● Check if all necessary cables are connected correctly.
Color Balance not proper	● Check if the lighting is adequate. ● Check the color temperature correction switch for proper setting. ● AWC may need to be readjusted.
Color rendition not proper	● Check if the color TV is adjusted properly. ● Check if the lighting is adequate. Insufficient lighting can considerably alter color rendition.
Viewfinder picture is upside down	● Turn camera power off. Then place the picture turning switch in the proper position.
VCR does not pause immediately when the trigger is squeezed.	● This is normal if the Fader switch is on.
Displays do not appear on the CRT	● Check if the "DISPLAY"button is pressed. ● Check if the VCR is placed in the proper mode. ● Check if the standby switch is placed in the "DISPLAY ON" position.
Camera remote control does not operate.	● Check if the camera remote switch of the VCR is set to "ON" position. ● Check if the VCR/CAMERA selector switch is placed in the proper position.
Focus is not sharp	● Check if the surface of the lens is dirty or dusty. ● Check if the lens is properly focused.
Color for indoor or outdoor is not correct	● Check if the color temperature correction switch is properly set. ● Color control knob may need to be adjusted.
Recording does not operate	■ When the Remote control is used, ● Check if the remote pause cable is correctly connected. (in case a home video recorder is used) ● Check if the camera cable is properly connected to the portable VCR.

10 Pin Camera Connector Diagram

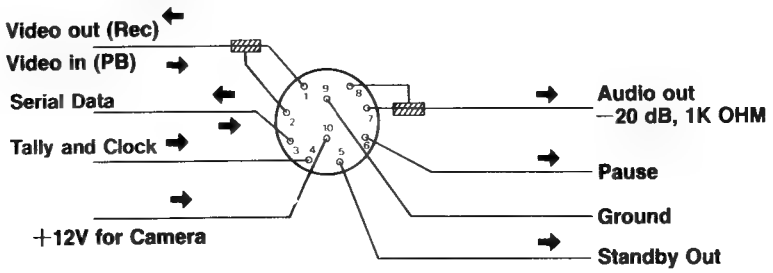

ABBREVIATIONS USED IN THIS MANUAL

ADJ : Adjustment
Adj. : Adjustment
AFC : Automatic Frequency Control
AGC : Automatic Gain Control
AMP. : Amplifier
AVR : Automatic Voltage Regulator
AWC : Automatic White Balance Control
B : Blue
BAL : Balance
B.F.P. : Burst Flag Pulse
BLK : Blanking
BPF : Band Pass Filter
BSC : Blue Sub Carrier
C : Close
CB : Composite Blanking
CBA : Circuit Board Assembly
CP-1 : Clamping Pulse 1
CP-2 : Clamping Pulse 2
CRT : Cathode Ray Tube
CS : Composite Sync
DEF : Deflection
DET : Detector
DIFF AMP : Differential Amplifier
DL : Delay Line
DY : Deflection Yoke
ELIM : Elimination
EVF : Electronic View Finder
FBT : Fly Back Transformer
FET : Field Effect Transistor
FH : 15.75 kHz Horizontal Drive Pulse Frequency
G : Green
GB : Gated Burst Signal
GEN : Generator
H : Horizontal
HCC : High Chrominance Clip
HD : Horizontal Drive Pulse
Hd : Horizontal Drive Pulse (Delayed HD)
HP : Horizontal Parabola Waveform
Hs : Horizontal Saw-tooth Waveform
HSS : Horizontal Scanning Start Pulse
LCC : Low Chrominance Clip
LIN : Linearity
LPF : Low Pass Filter
LVL : Level
MOD : Modulation
OB : Optical Black
OSC : Oscillator
OVF : Optical View Finder
PCB : Printed Circuit Board
PED : Pedestal
R : Red
REMO. CON. : Remote Control
RSC : Red Sub Carrier
SC1 : 0° Phase Sub Carrier
SC2 : 90° Phase Sub Carrier
SD : Shading Correction
SEPA. : Separation
TEMP. : Temperature
V : Vertical
VD : Vertical Drive Pulse
VP : Vertical Parabola Waveform
VS : Vertical Saw-tooth Waveform
VSS : Vertical Scanning Start Pulse
WBLK : Wide Blanking Pulse
YE : Edge Correction Input Signal
YH : Luminance Signal
YL : Low Band Luminance Signal

GENERAL DESCRIPTION

(1) SPECIAL TUBE

Special tube's features are shown as follows.

1. Less tube burn than conventional one.
2. Better resolution than conventional tube.
3. Much improved S/N ratio than conventional tube.

The special tube's (K4103) basic principles are same as vidicon. Special tubes are extensively used in closed-circuit TV cameras because of their small size, simplicity and ruggedness. Special tubes make use of the same basic principles as vidicon. This cameras uses a new electrostatic focus magnetic deflection 2/3" tube with an integral stripe filter. A conventional magnetic focus, magnetic deflection tube has an external focus coil (wound inside the deflection coil assembly) through which a DC current flows, forming an electron lens inside the special tube to focus the electron beam on the target. The electrostatic focus, magnetic deflection special tube has extra electrodes (G3, G4, G5) inside the special tube as shown in Fig. 1-a to focus the electron beam on the target. Total power consumption of the camera is reduced by eliminating the power that would have been required for the focus coil, and the power required for deflection is also reduced. The electron beam emitted by the cathode is accelerated by the G2 electrode and pass through a beam limiting aperture (Fig. 1-a) to form a small diameter electron beam. The electron beam is then focused by the electrostatic lens formed by electrodes G3-G4-G5, as shown in Fig. 1-b. This electrostatic lens replaces the focus coil and focus circuit. Electrodes G5-G6 form an independent "collimating lens" that bends the beam so that the landing angle of the electron beam is always perpendicular to the target for good corner resolution. The deflection assembly includes the beam alignment magnets (Fig 1-b) which provide an auxiliary magnetic field to center the electron beam in the tube. Since the effective diameter of the focus lens is small, misadjustment of the beam alignment magnets will result in poor resolution and color shading. Camera alignment, therefore, requires careful adjustment of the beam alignment magnets.

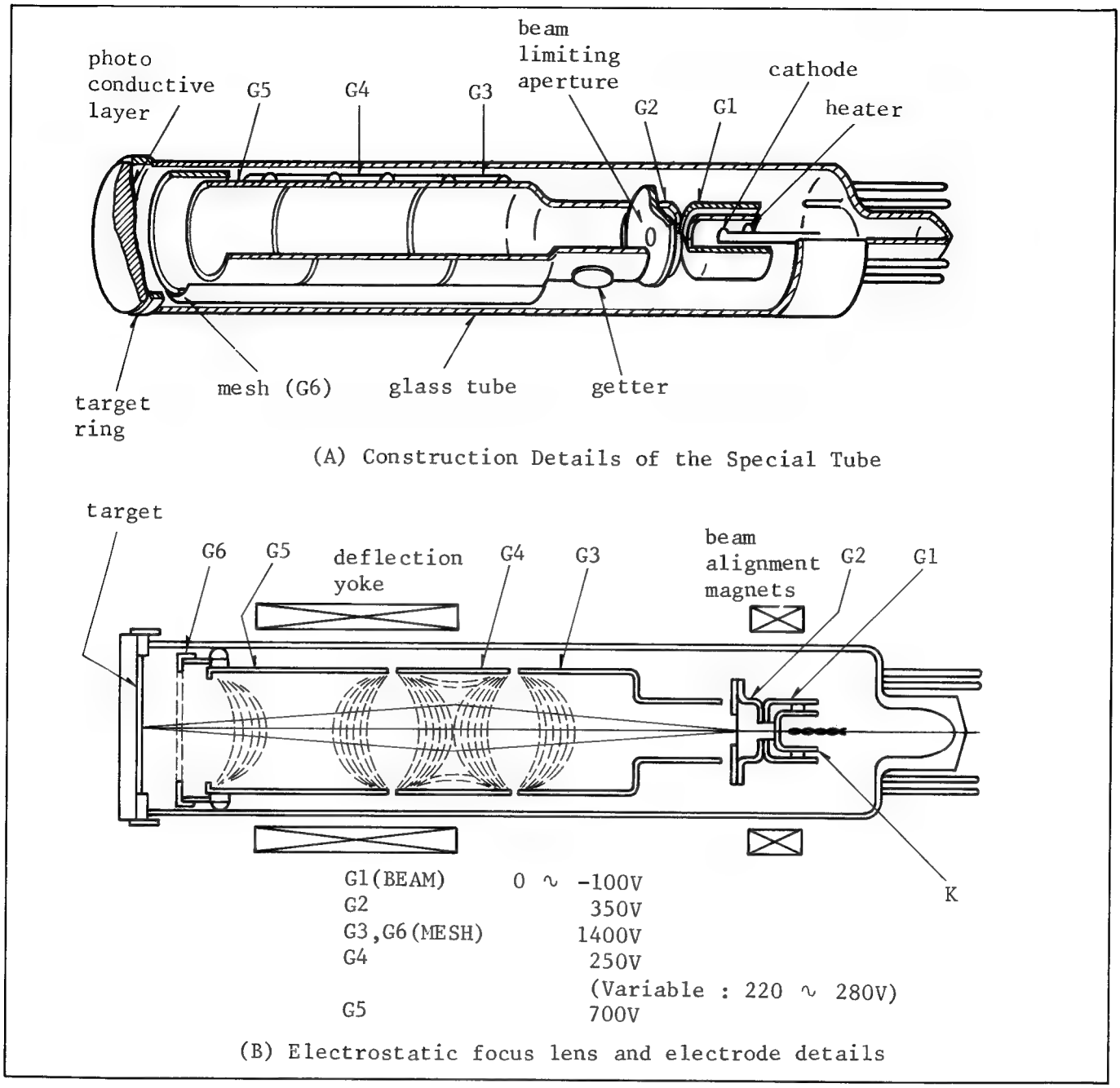

Fig. 1. Special Tube

The most important element in the special tube is the target, which is composed of a face plate made of nessa glass coated on the inner surface with a photo-conductive layer (As, Se, Te), and covered with a thin transparent conducting film (signal electrode).

The lens gathers the light from the scene and focuses it onto the face of the special tube. The photo-conductive layer creates a number of individual target elements. These elements are made up of electrostatic capacitance parallelled by light-dependent resistors (Fig. 2-a) forming an RC time constant. The electrostatic capacitance is basically formed between the nessa glass and the back surface, where the beam strikes the photo conductive layer which acts as a dielectric. The target elements are all connected on one end to the signal electrode. The other end is unterminated and ready to receive the beam.

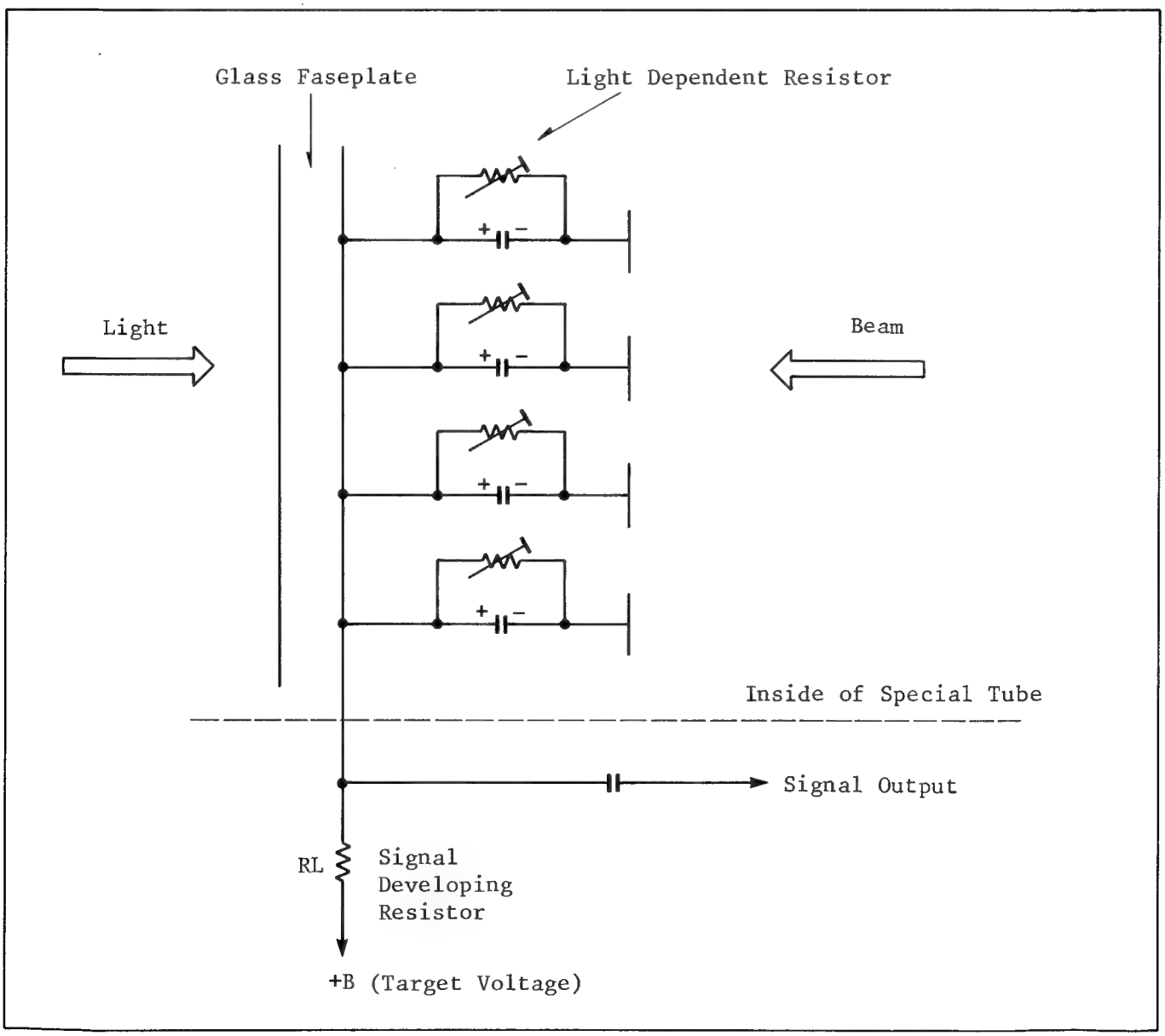

Fig. 2. (A) Target

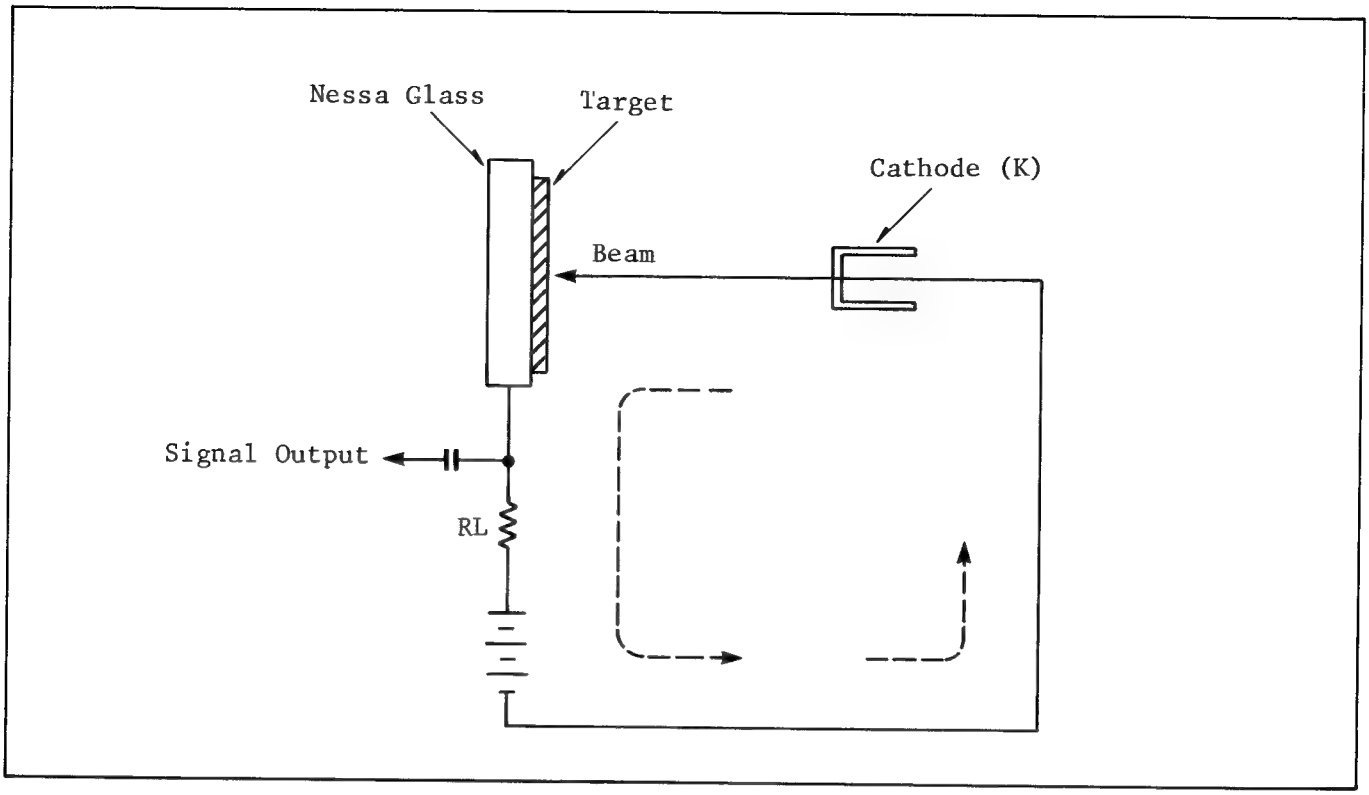

Fig. 2. (B) Electron Path

When there is no light striking the face plate of the Special tube, the light dependent resistors create a high resistance. Whenever light hits the face of target area, the resistance drops--the level depending on the amount or intensity of the light.

When a positive voltage is applied to the target (target potential), all the RC networks or elements will charge as the beam first scans the target area.

When the beam is not in contact with the element, the capacitor will slowly discharge through the light-dependent resistor connected across it. Keep in mind that each element's resistance will vary depending on the light level. On subsequent scans of the beam, the capacitors will recharge back to the target potential. It is this charging current that is sensed to produce the video signal.

When the beam scans the target, electrons are deposited on the positively-charge areas, which will return them to the negative potential of the cathode. This causes current to be produced which flows through the external signal developing resistor RL (see Fig. 2-B), and it's this changing current (dependent on light) which is the converted optical image.

(2) GAMMA

As light falls on the target, the signal output increases, but not at a linear rate. The relationship of light input to output signal is referred to as the gamma (γ) or transfer characteristic. Special tubes have a gamma of about 0.9 or 0.95. The cathode ray picture tube has a transfer characteristic of its own, which is 2.2. To get a unified transfer-of-light change, the camera must achieve a gamma of 0.45, the reciprocal of 2.2. (2.2 x 0.45 = 1) This is called gamma correction, and is achieved by means of an electronic circuit.

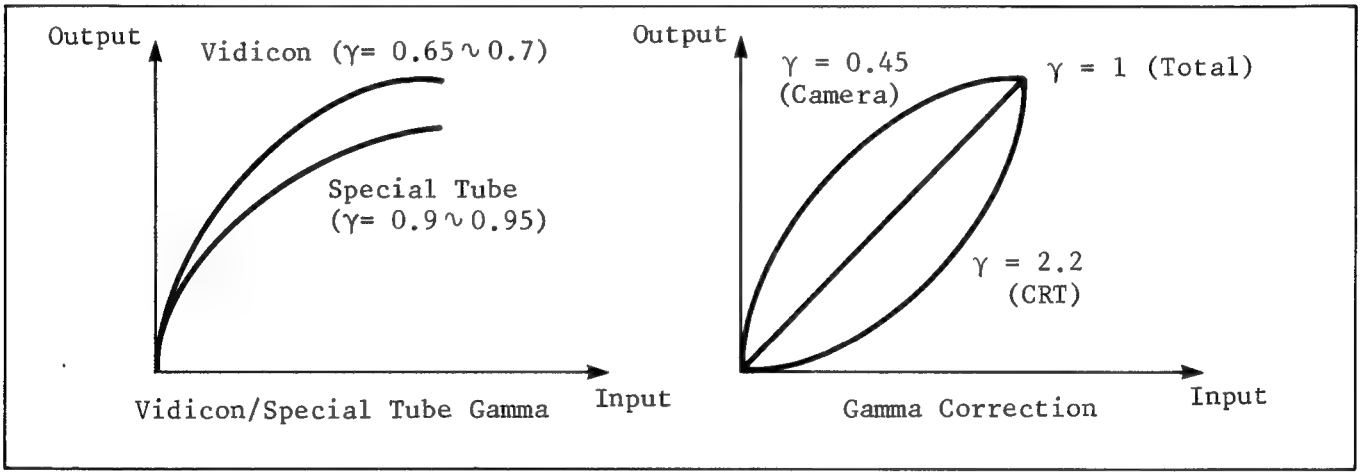

Fig. 3.

(3) STRIPE FILTER

The operation of the stripe filter on the face plate of the special tube depends on several facts which bear review. The composition of what is perceived as white light is a mixture of many wavelengths, which we can group by wavelength or color, as shown in Fig. 4-(A).

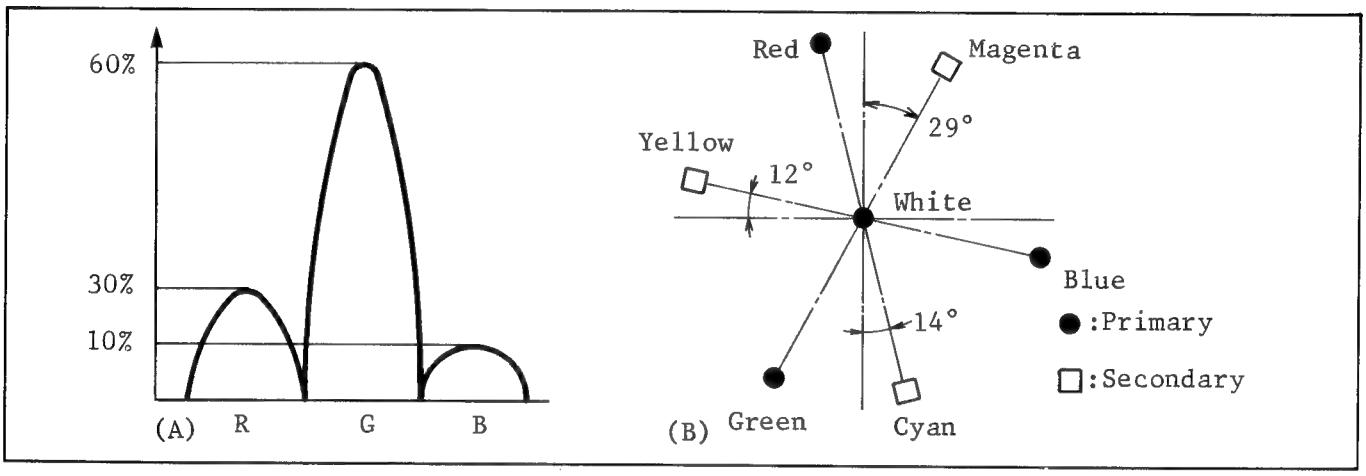

Fig. 4. Amplitude and Phase Relations Between R,G and B.

While it may be apparent that all the wavelengths or colors will pass through a transparent filter, one must consider the operation of a filter of complimentary colors. In a tricolor system of colorimetry (Fig. 4-(B)), any two primary colors may be mixed to form a secondary color which is not one of the original three primary colors but the exact opposite of the unused primary color. White light passed through a filter of this new, secondary color will contain both of the original colors but none of the complementary color. Imagine a filter of yellow, a color which is made from Red and Green (Fig. 4).

Should white light be passed through this yellow filter, Red, Green and some Magenta and Cyan light will pass, but blue light will not pass. Similarly, if a cyan filter were used, all but Red would pass. Lastly, the use of a color filter will of course allow the passage of image details--for example, the shape, outline and reflectance of the objects seen by a lens--if an image were used in place of the white light described above.

The stripe filter special tube is based on these three details:

1. The color of any object can be carried by the information in the three primary colors.
2. When red, blue and green are used as the primary colors, 56% of the visual information and light energy is green. (Fig. 6-(A))
3. A cyan filter will pass green and blue (but not red) (Fig. 5-2) and a yellow filter will pass green and red (but not blue) (Fig. 5-2).

Now let's discuss the color portion of the special tube. When a thin film filter such as that depicted below is placed on the face plate, both the filter stripes and the image from the camera lens will be in focus without the use of additional lenses.

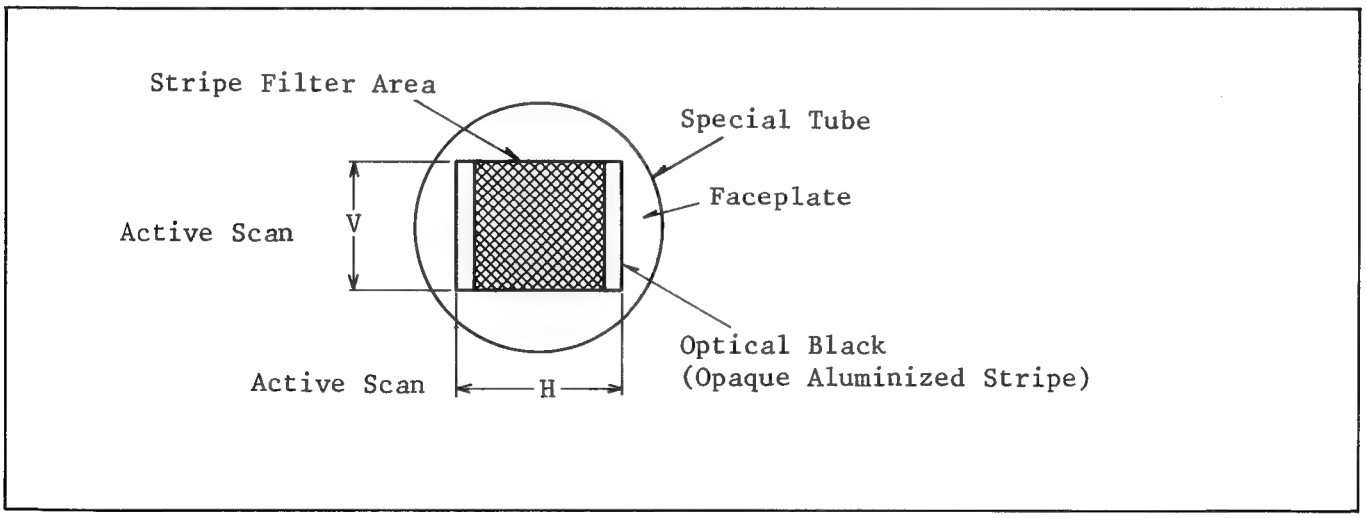

Fig. 5-1. Special Tube Faceplate

With careful design of size of active scan area or size of stripes, horizontal and vertical, the conditions described in Fig. 6 can be obtained.

COLOR STRIPE FILTER	COLOR PASSED
Transparent (Clear)	Red, Blue and Green
Cyan	Blue and Green
Yellow	Red and Green
Cyan and Yellow	Green

Fig. 5-2.

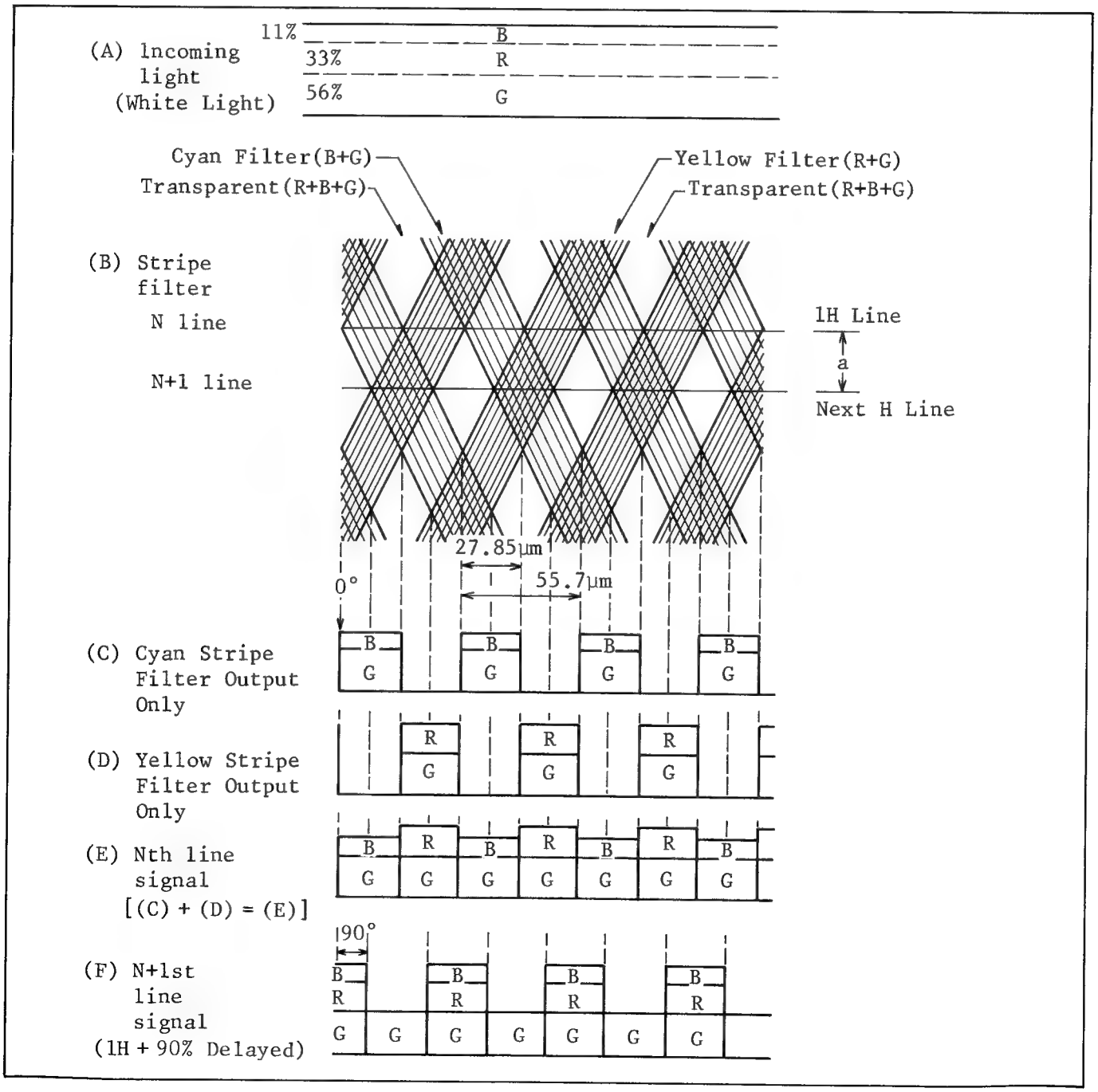

Fig. 6. Signal from Special Tube

The tube alignment and rotation assure that the horizontal scan exactly bisects the angle formed by the stripes, while vertical scan determines that each horizontal scan falls as shown in Fig. 6-(B). Further more, the width of each stripe and of the horizontal scan determines the characteristic frequency of the process, in this case, 4.3MHz. As light falls on the stripes, the contrast pattern formed by stripe/no stripe/stripe will optically generate an R.F. carrier above the fundamental luminance information (picture detail). This carrier rides above the luminance.

As shown in Fig. 6-(B), the integral stripe filter consists of a cyan/transparent stripe filter section and a yellow/transparent stripe filter section.
These stripe filters are so arranged as to be of the same pitch in the horizontal scanning direction, and of equal angle in the vertical direction. The special tubes even and odd scanning lines pass the elements of the stripe filters that are arranged in a fixed pattern. Let's assume that a white light of uniform level containing proportioned green (G), red (R) and blue (B) reaches the special tube (Fig. 6-(A)), and the cyan and yellow stripe filter is scanned as shown in Fig. 6-(B). The cyan filter cuts off the R light which is complimentary to cyan (Fig. 6-(C)), and the yellow filter cuts off the B light which is complimentary to yellow (Fig. 6-(D)). At the N scanning line, the signal E contains the modulated R and B signals, and G signal.
At the next horizontal scanning line N + 1, the signal F also contains the modulated R and B signals and G signal. The stripe filters have the same pitch in the horizontal scanning direction and the same angle in the vertical directions so that there is a carrier phase difference of 90° between the N line and the N + 1 line modulated signals. This modulation frequency for the R and B signals can be calculated from stripe width, pitch, and scan width and velocity, in this case, 4.3MHz.

The incoming light is thus converted by the integrated stripe filter into a signal which contains R and B signals modulated by 4.3MHz. This signal is sent to the pre-amplifier, where it is amplified (Fig. 7-(G)). The amplified signal G from the pre-amplifier is sent to a low pass filter circuit, which passes only the luminance (YH) signal (Fig. 7) H making up the G signal. The amplified signal G is also supplied to the band-pass filter (BPF) whose center frequency is 4.3MHz, through which only the modulated signal 1 passes.

The modulated signal 1 is sent to the 90° phase shift circuit and the 1H (1 line) delay circuit, from which 90° phase-shifted and 1H-delayed, modulated signals J and K are obtained. The modulated R (Rc) signal (L) is obtained by adding the modulated signals (J) and (K), and a modulated B (Bc) signal (N) is obtained by subtracting the modulated signals (J) and (K). The Rc and Bc signals obtained by addition and subtraction are supplied to the detectors, from which R signal (M) and (B) signal (O) are obtained.

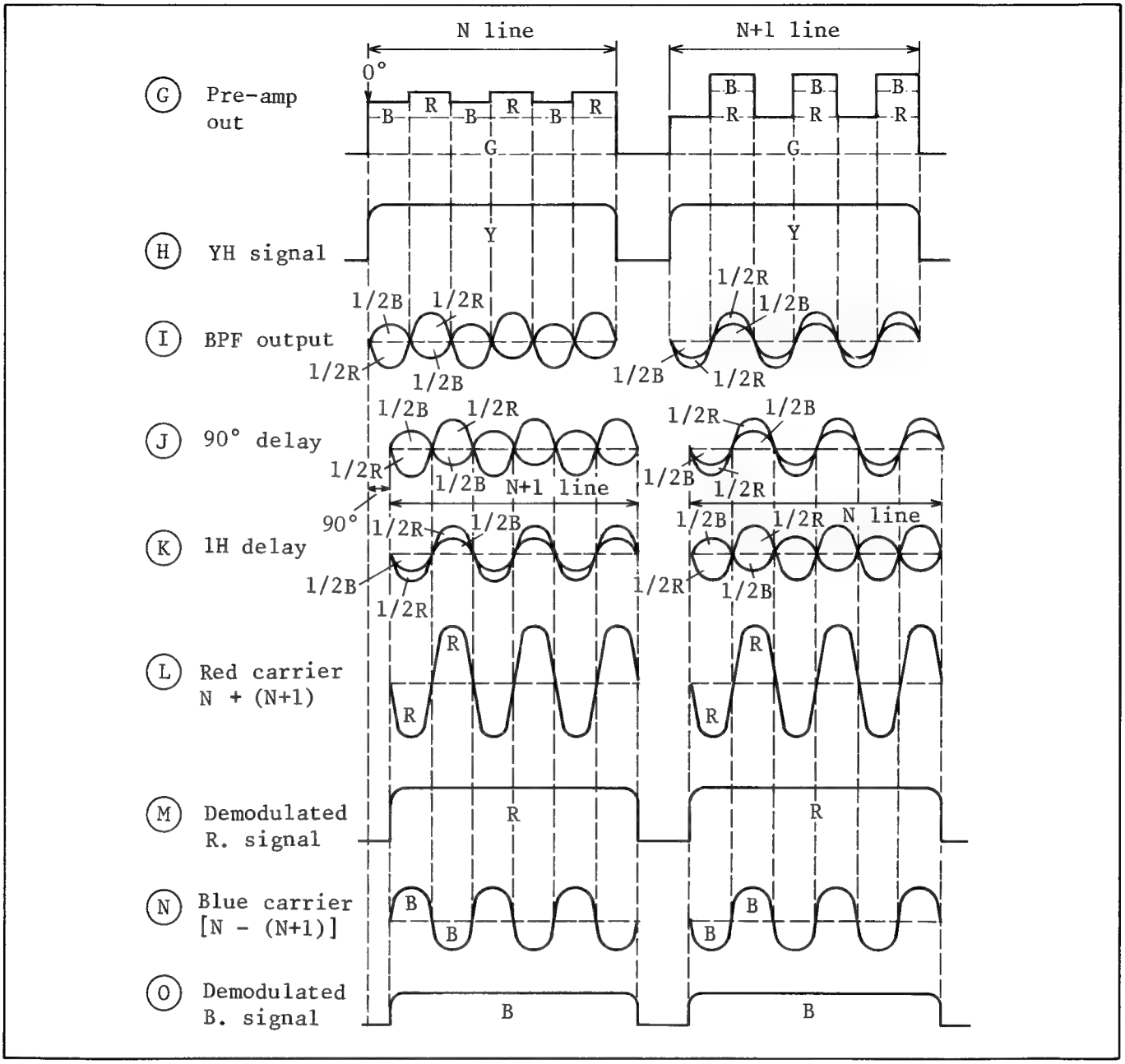

Fig. 7-A. Detection of Y,R and B. signals

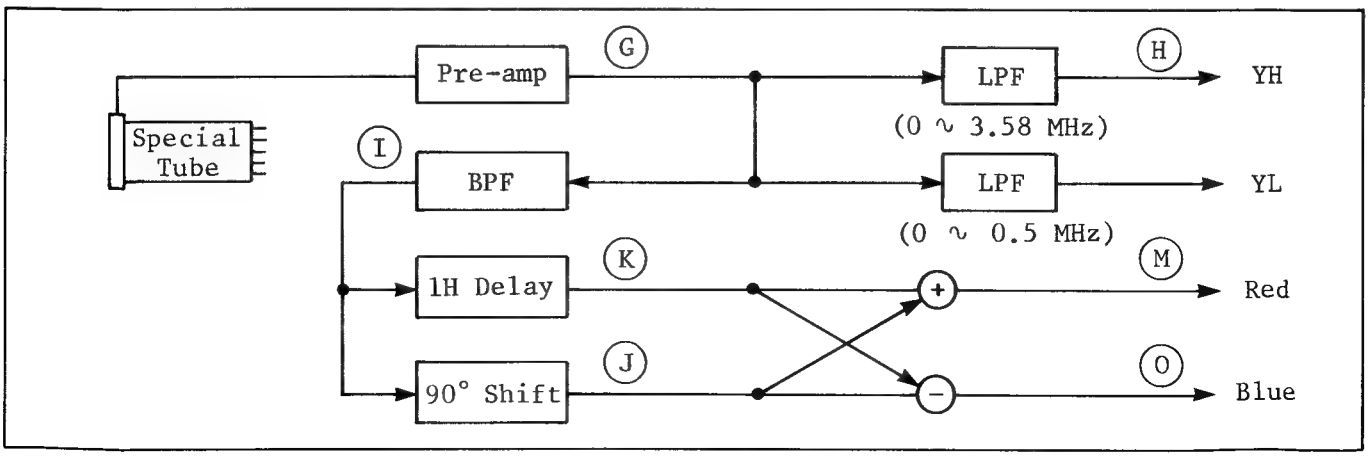

Fig. 7-B.

(4) CORRECTION CIRCUITS

A. Color Temperature Correction

There are two main aspects we have to consider when we think of light. The first is the brightness or intensity (Fig. 8) and the second is the color temperature.

Rough Values of Brightness

The figures in this table are approximate values for reference.

Lighting necessary
10 footcandles
(100 lux)

Practical range

Standard Illumination
90 footcandles
(900 lux)

1,000 footcandles
(10,000 lux)

[foot-candle]	[lux]	[Place or Daylight]
10	100	
	100∿200	Commercial stairways
	200∿300	Indoor golf range
	400∿500	Office with fluorescent lamps
	500∿700	Department store counter
	700∿800	Assembly line
100	1,000	
	1,000	Sunlight one hour before sunset, clear day
	1,000	Window side of an office with fluorescent lamps
	2,000	Sunlight one hour after sunrise on a cloudy day.
1,000	10,000	
	25,000	Sunlight at 10AM, cloudy day
	32,000	Sunlight at noon, cloudy day
	35,000	Sunlight at 3PM, clear day
	65,000	Sunlight at 10AM, clear day
10,000	100,000	Sunlight at noon, clear day

Fig. 8.

Light is made up of a spectrum of frequencies or colors, with violet being the lowest frequency and red being the highest (Fig. 9).

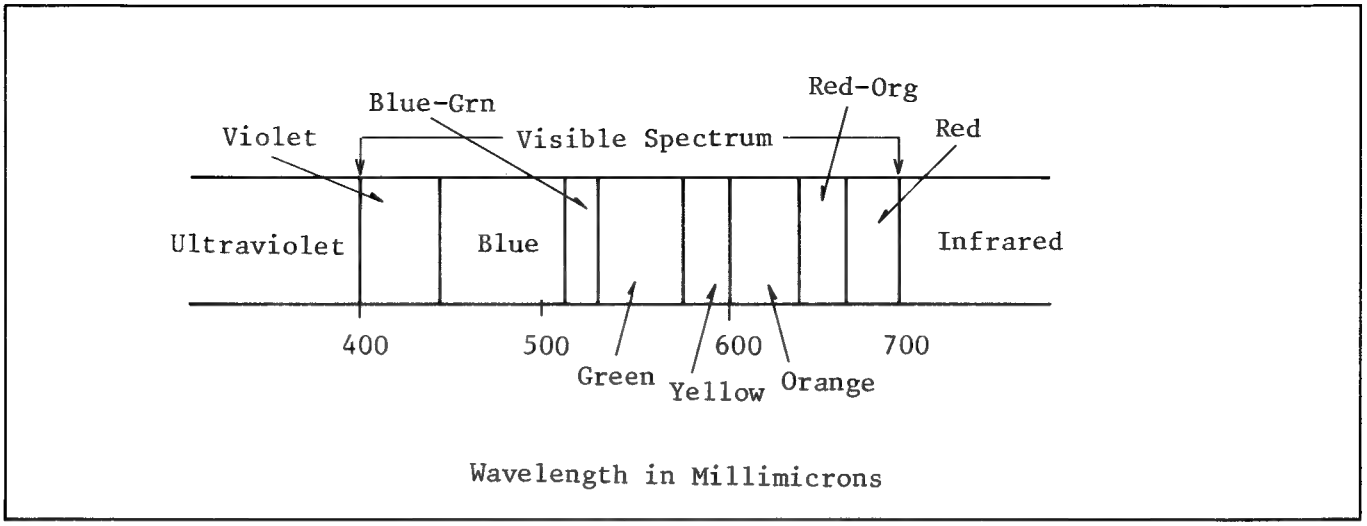

Fig. 9.

The human eye has a unique ability to perceive color correctly even when the light source is changed (i.e. when color temperature varies) from pure white to red-white or blue-white. However, machines do not have such ability, and "see" even the slightest color change.

The color mix of what we perceive as white light (Fig. 10) will change

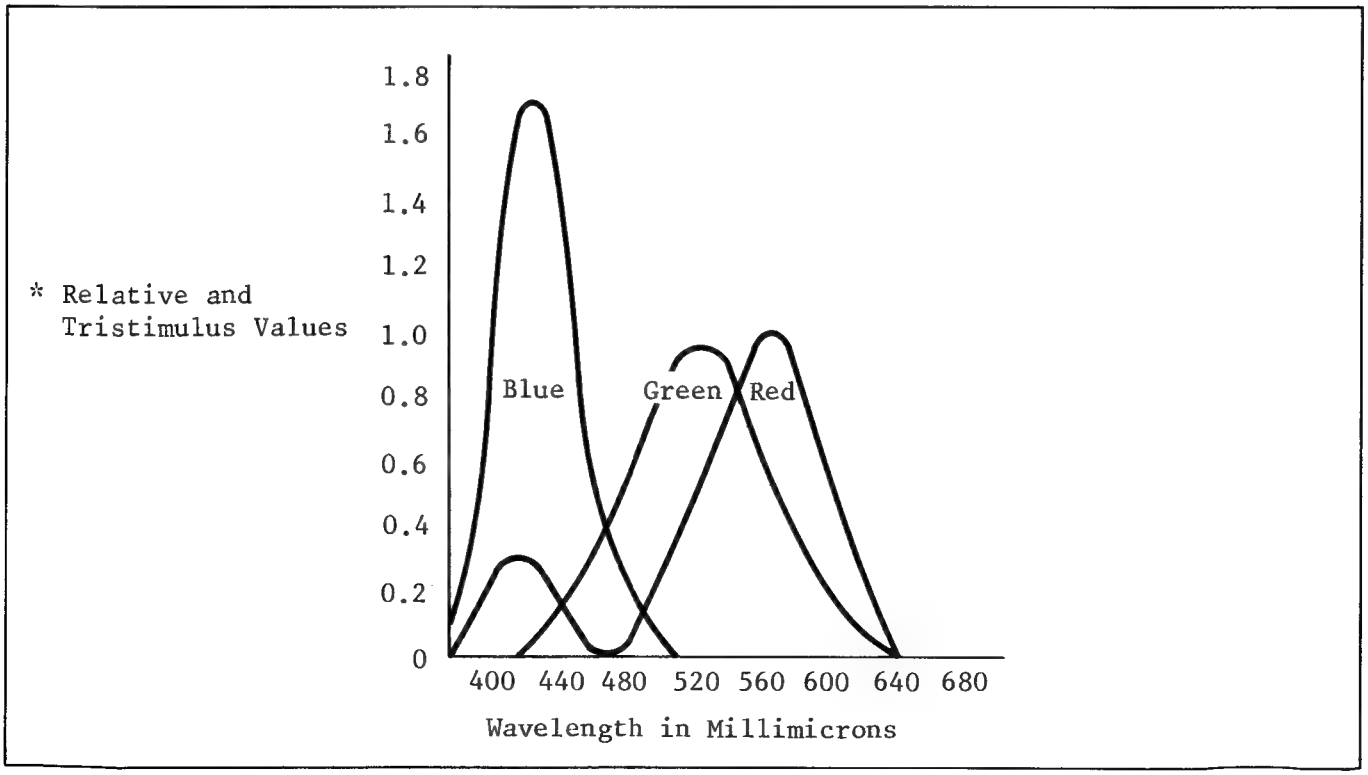

Fig. 10.

* Tristimulus Values:

The amount of the three primary colors required to produce white light.

as we move from indoor artificial light to sunlight, objects illuminated by these different light sources will change the proportions of the red and blue signals and the cameras output will appear to be miscolored. Cameras are normally adjusted to 3200° Kelvin Temperature (Fig. 11).

Light Source		Normal Color Correction	Color Temperature
Studio lighting such as Halogen lamp and tungsten lamp			3200°K
Room light	Incandescent Lamp		4500°K
	Fluorescent		5000°K
Outdoor scene (sunny or overcast)			5500°K

Fig. 11.

It is for this reason that we have an automatic white balance control switch and color control knob mounted on the back of the camera. With these controls, the proportions of the red and blue signals can be changed to achieve a better white balance. At 3200°K we have a more reddish picture, so less gain is required in the red channel and more in the blue channel. At 5000°K or 5500°K, we have a more blueish picture and less blue gain is needed and more red.

B. V Edge Color Error Correction

As described, the Rc and Bc signals are separated from each other by addition and subtraction of the Rc/Bc signal delayed one horizontal line and the undelayed Rc/Bc signal.

When the camera views a dark-to-bright, or bright-to-dark transition as shown in Fig. 12, the undelayed Rc/Bc signal appears as in Fig. 12 (C), and the Rc/Bc signal delayed one line (1H) appears as in (D). When we make the transition from dark to bright the Rc/Bc (C) and (D) signals are not of equal level on the N + 1 line and an error signal (green) is created along the vertical edge of the transition.

Thus it is necessary for us to supply a positive vertical (V) edge correction signal (E) to control the level of the N + 1 line (A). This provides vertical correlation between Rc/Bc signals delayed and not delayed ((D) and (C)) prior to color separation. If the transition is from bright to dark, the error signal will be magenta and a negative V correction signal will be used. We will discuss this in more detail later.

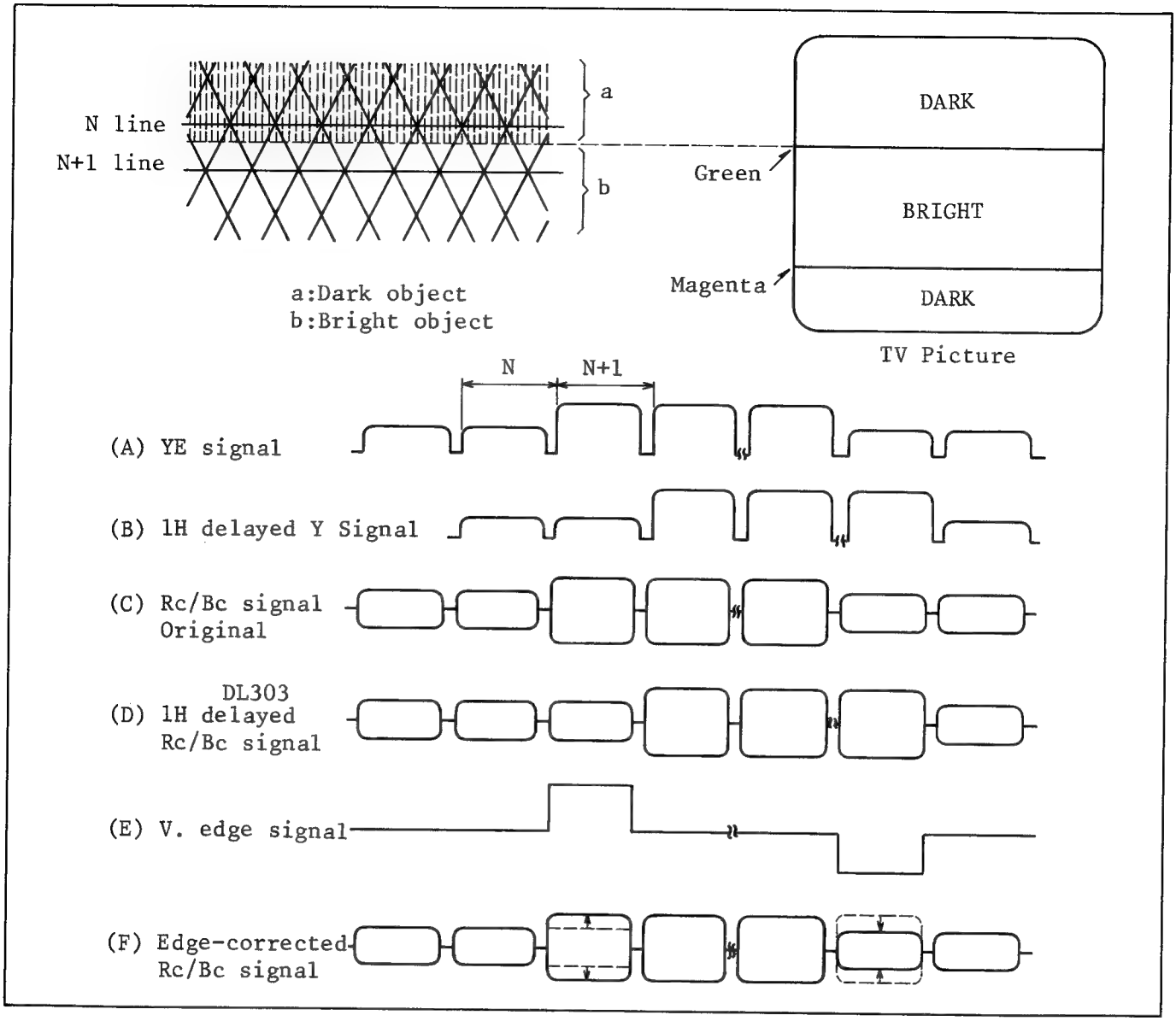

Fig. 12. Color Correction

C. Color Shading Correction

Often the photo conductive layer on the surface of the special tube is uneven. It is necessary to electrically correct for this unevenness.

Suppose a uniformly illuminated white object is seen by the camera and the R color component signal has a shading (error) such as that shown in Fig. 13 (A). In this case, a shading correction signal (B) is generated by the shading correction circuit (which is set to the proper level during alignment). The R signal (A) is modulated by the shading correction signal (B), and a corrected R signal (C) is produced. This shading correction signal is mixed with the R signal (C) by a differential amplifier, and the R signal (D) is obtained. The color shading correction of the B signal is similar.

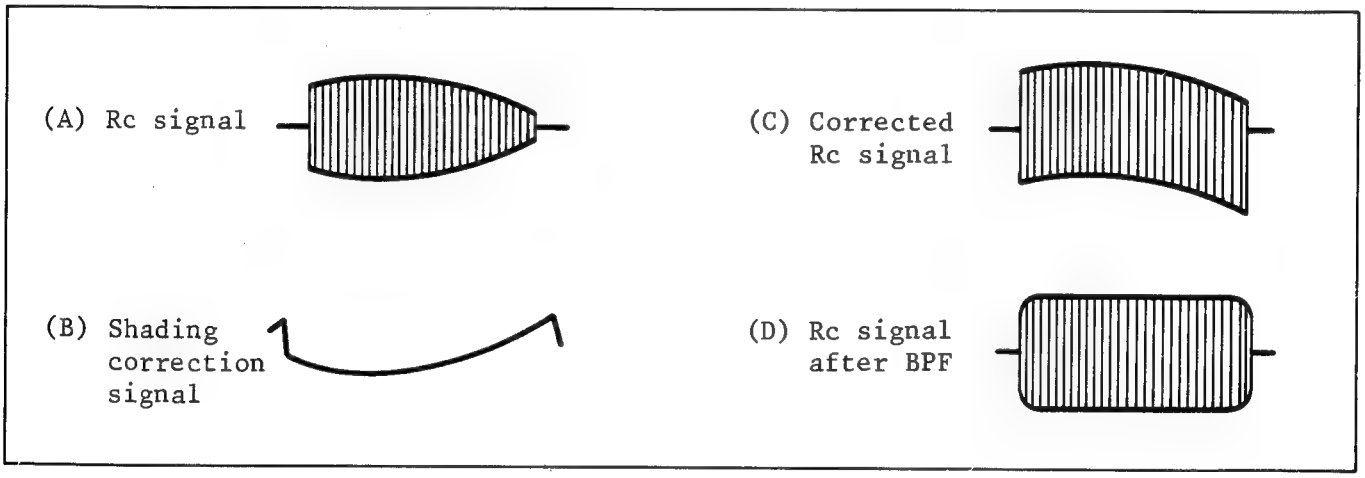

Fig. 13. Shading Correction

These correction waveforms are horizontal rate sawtooth and parabola waveforms. The two signal are formed from the horizontal deflection drive and injected in just the right amount to get an overall flat color waveform.

D. De-gamma Correction Circuit

As described earlier, the special tube does not have linear photoelectric conversion characteristics. A typical special tube gamma characteristic is shown in Fig. 14 (A). Because of this inherent characteristic, the higher levels of the video signal will be compressed, see Fig. 14 (B).

Since the special tube in this color camera produces 4.3MHz modulated red (R) and blue (B) signals mixed with a green (G) signal (see Fig. 15 (A)), the higher levels of the modulated R and B signals obtained by separating the mixed signals are also compressed (B). The de-gamma correction signal circuit generates a de-gamma correction signal (D) to compensate for the compression of the higher levels of the R and B signals. This correction signal will be applied to both the Rc and Bc circuits as needed.

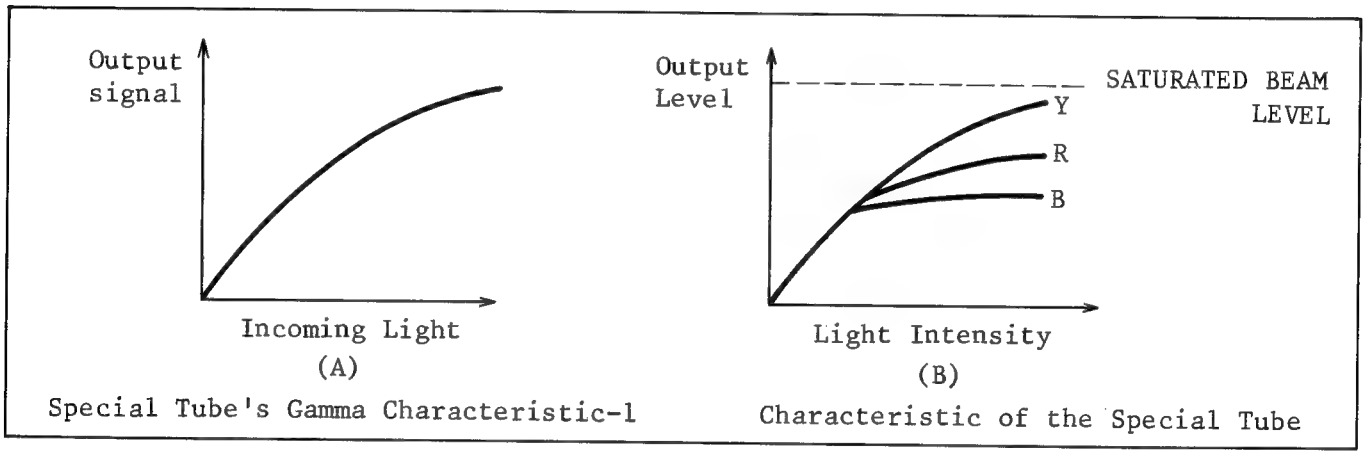

Fig. 14.

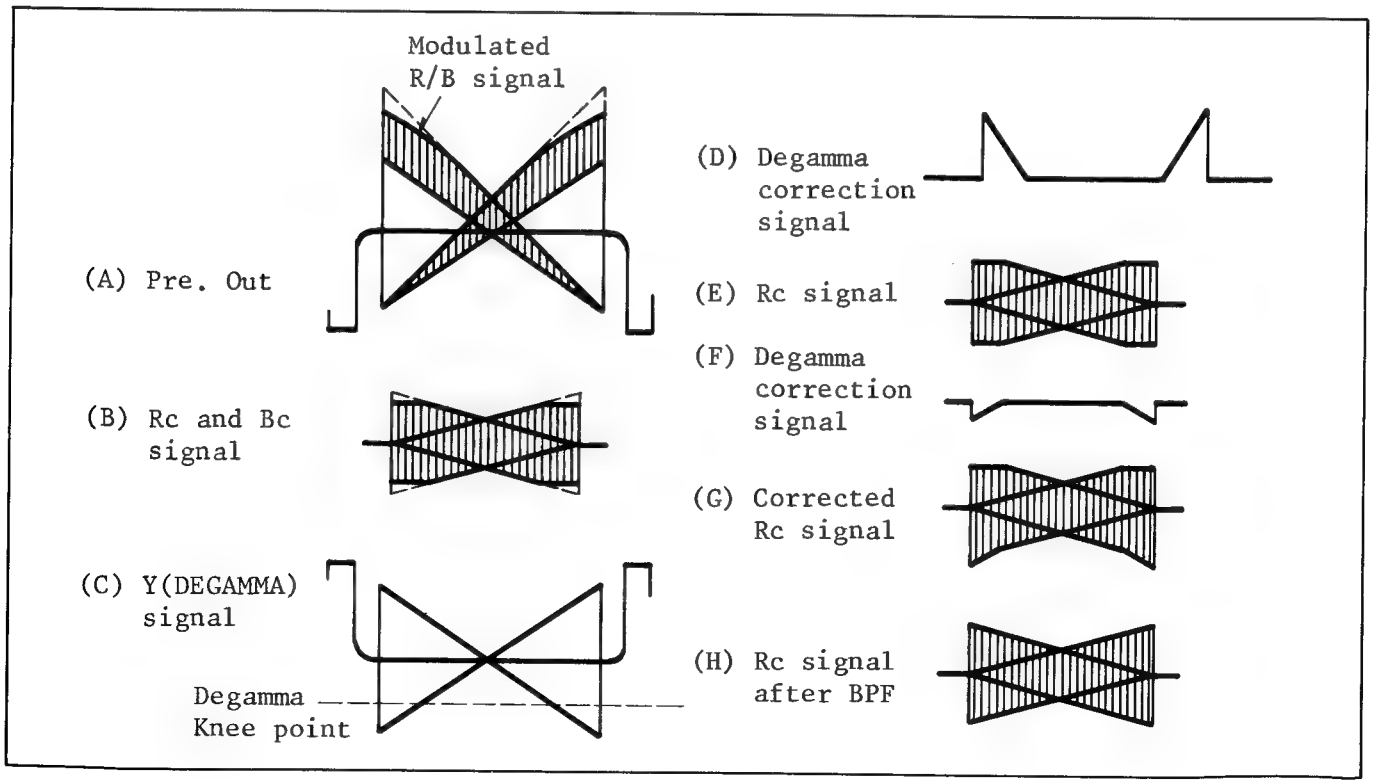

Fig. 15. Degamma Correction Signal

E. Optical Black Clamp

A metallic stripe (optical black) (Fig. 16) is built into the special tube for cutting off the incoming light at the end of the horizontal scanning. When the beam scans the optical black portion, the dark current of the special tube is sampled and is clamped to a fixed DC potential, so that the black level variations due to a change in dark current can be tracked.

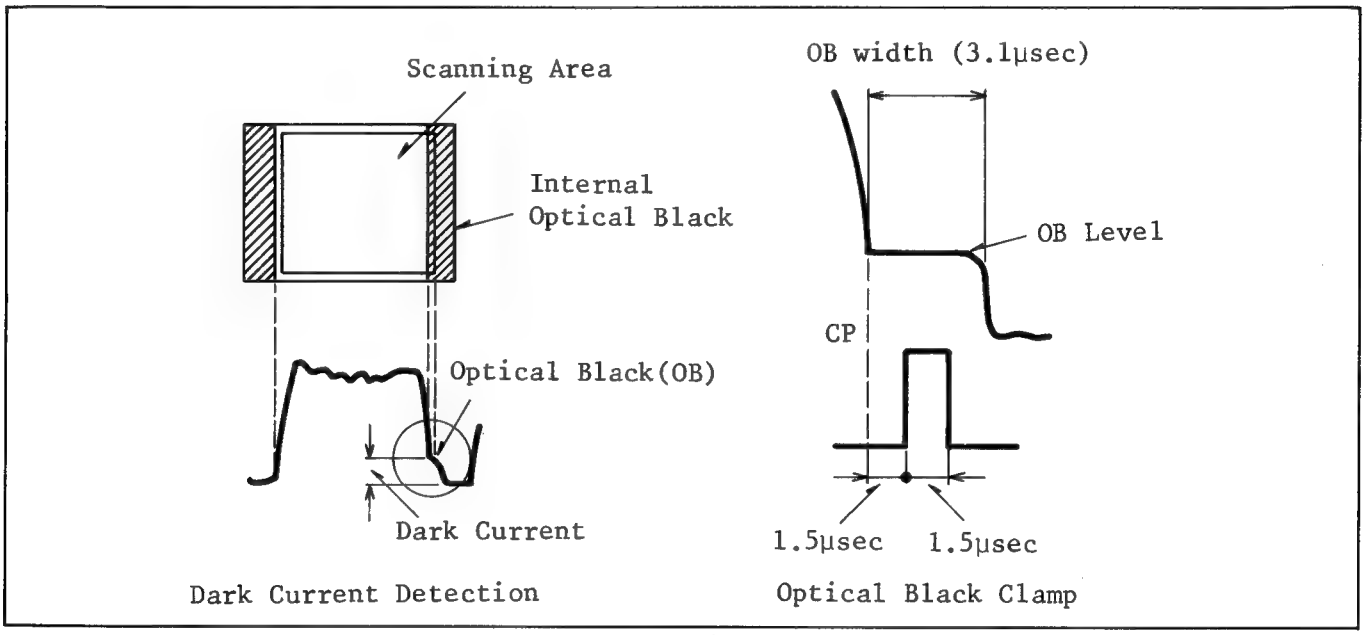

Fig. 16.

F. High Luminance Chroma Clip Circuit

When the incoming light is extremely bright, the luminance level increases in direct proportion to the incoming light, therefore, the modulated chroma signal from the special tube is lowered in the inverse proportion to the incoming light until it finally disappears, resulting in a greenish picture on the TV screen and loss of white balance.

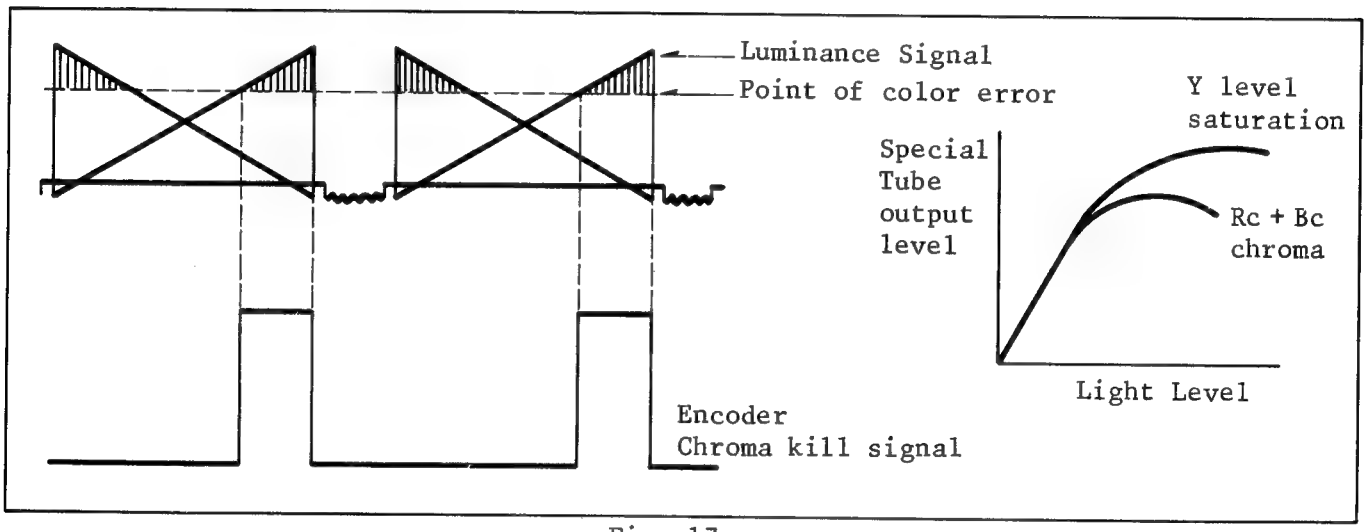

Fig. 17.

Therefore, a signal must be sent to the encoder to turn off the NTSC chroma modulators at peak whites. Since the chroma information in the NTSC signal is difference information, the lack of chroma makes the peak signal appear white, rather than miscolored (greenish picture).

G. Horizontal Aperture Correction

The electronic beam has some thickness, so that when the electronic beam scans the special tube face or CRT, it causes some loss of resolution.

To enhance the horizontal resolution, a correction circuit generates a horizontal aperture correction signal.

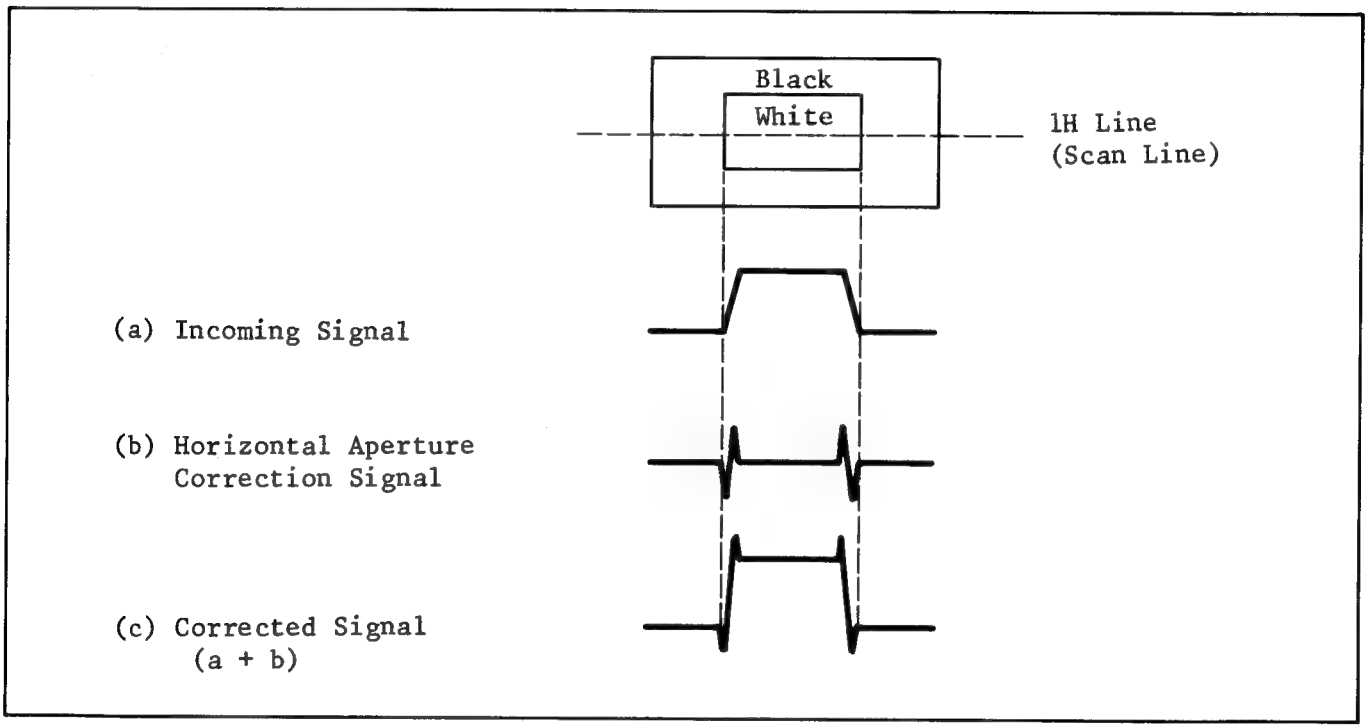

Fig. 18. Horizontal Aperture Correction

ORDER NO. VRD-8202-048

Service Manual

Color Video Camera

PK-802

Vol. 2

Troubleshooting Guide

Adjustment Procedures

SPECIFICATIONS:

Power Source:	DC 12V ± 10% AC 120V ± 10%, 60Hz ± 0.5% (with Power Supply Unit)
Power Consumption: **(with E.V.F)**	DC 5.8W at 12V DC (Battery) DC 1.2W at standby
Special Tube System:	2/3″ frequency separation single tube system (built-in stripe filter)
Single Carrier Frequency:	4.3MHz
Focus System:	Electro-static type
Lens Mounting:	Built-in zoom lens (not "C" mount)
Lens:	6:1 zoom lens with auto/manual iris control. Auto zoom lens and macro construction F: 1.4, f: 12mm—72mm d: 1.0m to infinity
Lens Diameter:	49mm
Light Sensitivity:	Minimum light intensity on optical image: 40 Lux (F: 1.4) Optimum light intensity on optical image: 900 Lux
Video Output Level:	1.0Vp-p, 75Ω (M type coaxial connector) (Standard NTSC signal)
Sync. System:	Internal Sync: RS-170
Signal to Noise Ratio:	More than 45dB
Horizontal Resolution:	More than 270 lines
Color Temperature Control:	2 step switch (indoor/outdoor) & auto adjust
Microphone:	Condenser Microphone
Audio Output Level:	−20dB, Hi-impedance
Audio Output Impedance:	High impedance (1KΩ)
External Microphone Input Impedance:	600Ω unbalanced
Electronic Viewfinder:	Monochrome 1 inch CRT
Operating Temperature:	5°C to 35°C
Operating Humidity:	10% to 75%
Operating Position:	Normal position only
Weight:	Camera Head with E.V.F. 5.1 lbs (with lens, 7ft. cable & shoulder pad/handle grip) AC adaptor (option) 2.4 lbs
Dimensions:	Camera Head with E.V.F. 8.3″(W) × 8.7″(H) × 11.2″(D) 208mm(W) × 218mm(H) × 282mm(D) AC adaptor (option) 3″(W) × 3″(H) × 6″(D) 80mm(W) × 75mm(H) × 149mm(D)

Weight and dimensions shown are approximate.
Specifications are subject to change without notice.

Panasonic®

Panasonic Company
Division of Matsushita Electric
Corporation of America
One Panasonic Way, Secaucus,
New Jersey 07094

Panasonic Hawaii Inc.
91-238 Kauhi St. Ewa Beach
P.O. Box 774
Honolulu, Hawaii 96808-0774

Panasonic Canada
Division of Matsushita Electric
of Canada Limited
5770 Ambler Drive, Mississauga,
Ontario, L4W 2T3

Panasonic Sales Company,
Division of Matsushita Electric
of Puerto Rico, Inc.
Ave, 65 De Infanteria, KM 9.7
Victoria Industrial Park
Carolina, Puerto Rico 00630

PRODUCT COMPLIES WITH DHEW RULES 21CFR SUBCHARTER J APPLICABLE AT DATE OF MANUFACTURE

SAFETY RECAUTION

GENERAL GUIDELINES

1. When service is required, observe the original lead dress. Components, wires or cables that indicate evidence of overheating or other electrical or mechanical damage should be replaced.
2. After servicing the camera, power supply and electronic viewfinder, all the protective devices, such as insulation tape, shields and isolation R-C combinations must be properly installed.
3. Potentials as high as 5KV are present when the electronic viewfinder is operating. Operation without the camera head side covers, finder case ass'ys of electronic viewfinder and covers of power supply unit presents a danger of shock hazard from the camera power supply. Servicing should not be attempted by anyone who is not thoroughly familiar with the precautions that should be taken when working on high-voltage equipment. Always discharge the anode of the picture tube to the main chassis before handling the tube.
4. After servicing , make the following leakage current checks to prevent the customer from being exposed to shock hazards.

LEAKAGE CURRENT COLD CHECK

Conduct this test on the power supply unit with the camera disconnected and repeat with the camera, power supply unit and electronic viewfinder properly assembled. Also, repeat test with and without available approved accessories/cables/connectors.

1. Turn the AC switch on.
2. Measure the resistance value, with an ohmmeter, between the jumpered AC plug and each exposed terminal, screwheads and coaxial connectror. The resistance measured should not be less than ∞ (infinity). Any resistance value below this range indicates an abnormality which requires corrective action.
3. Repeat the test with the AC switch in the "off" position.

LEAKAGE CURRENT HOT CHECK

Conduct this test on the power supply unit with the camera disconnected and repeat with the camera, power supply unit and electronic viewfinder properly assembled. Also, repeat test with and without available approved accessories/cables/connectors.

1. Plug the AC cord directly into the AC outlet. Do not use an isolation transformer for this check.
2. Connect a 1.5KΩ 10 watt resistor, paralleled by 0.15μF capacitor, between each exposed metallic part on the unit and a good earth ground such as a water pipe, as shown in figure 1.
3. Use an AC voltmeter, with 1000Ω/volt or more sensitivity, to measure the potential across the resistor.
4. Check all exposed metallic parts of the cover (Cable connection, Handle bracket, metallic cabinet, Screwheads, Metallic overlays, etc), and measure the voltage at each point.
5. Reverse the AC plug in the AC outlet and repeat each of the above measurements.
6. The potential at any point should not exceed 0.75 V RMS. A leakage current tester (FLUKE MODEL: 8000A equivalent) may be used to make the hot checks. Leakage current must not exceed 0.5 milliamp. In case a measurement is out side of the limits specified, there is a possibility of a shock hazard, and corrective action must be taken before returning the instrument to the customer.

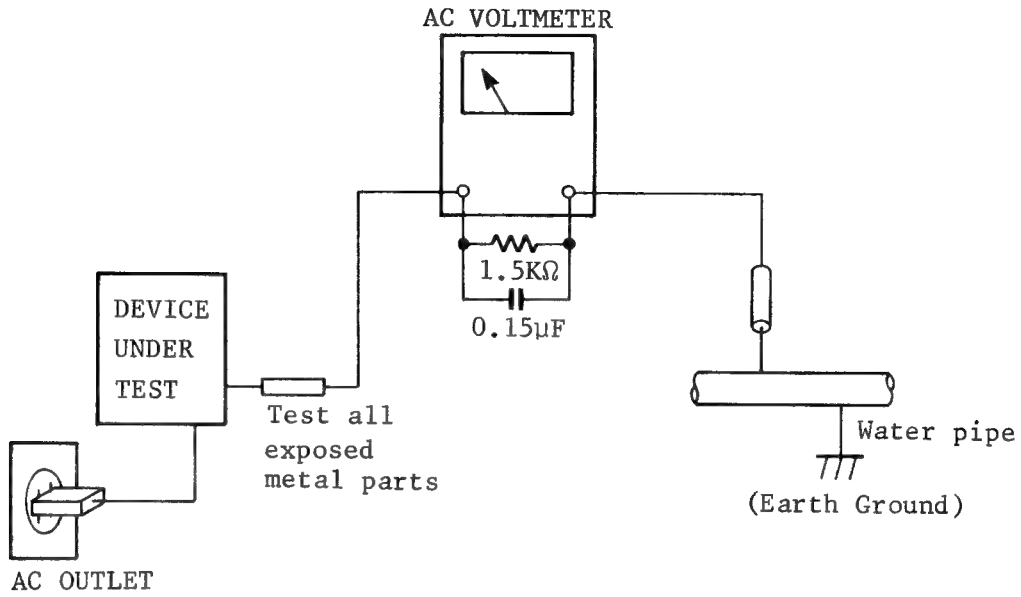

Figure 1. Leakage Current Hot Check

X - RADIATION

1. The potential source of x-radiation in electronic viewfinder is the high-voltage section and picture tube.
2. It is important to use a periodically checked and accurate high-voltage meter, to monitor and check the high voltage.
   Rotate the brightness control and contrast fully counterclockwise for this test.
3. Observe that the high voltage does not exceed the specified value.
   Excessive high voltage may cause a possible x-radiation hazard.
   The camera system should be repaired as soon as possible.
4. It is essential to use the specified picture tube to avoid a possible x-radiation hazard.

CONTENTS

SERVICE & SIGNAL FLOW CHART 2-3

LUMINANCE SECTION

No Picture 2-3

No Picture (Defective Iris Circuit) 2-4

No Picture (Defective Negative/Positive Reverse Circuit) 2-5

CHROMINANCE SECTION

No Color 2-6

No Color (Defective Burst Circuit) 2-7

No Red and Blue 2-8

No Green 2-9

TROUBLE SHOOTING CHART

5V/7V Power Source 2-10

Micro-Computer 2-12

ADJUSTMENT PROCEDURES 2-19

Disassembly Method 2-19

(1) +9V Adjustment 2-29

(2) Deflection Circuit Adjustment 2-30

(3) Process Circuit Adjustment 2-46

(4) Electronic Viewfinder Circuit Adjustment 2-55

LOCATION OF TEST POINTS AND CONTROLS 2-55

COLOR CAMERA SERVICING FIXTURES 2-56

LUMINANCE SECTION

SERVICE FLOW CHART

NO PICTURE

If there is no picture, Test Point TP301 is the suggested place to start checking.

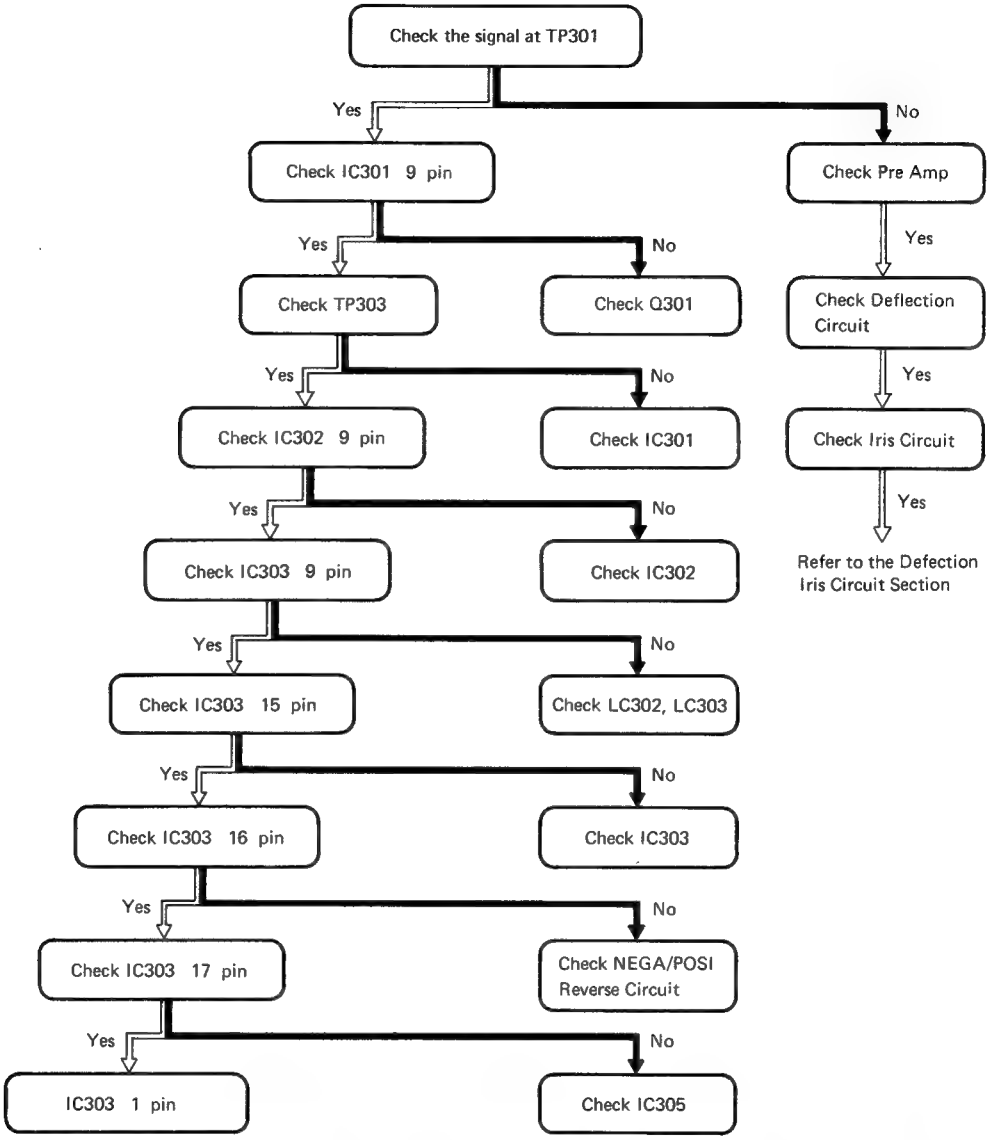

SIGNAL FLOW CHART

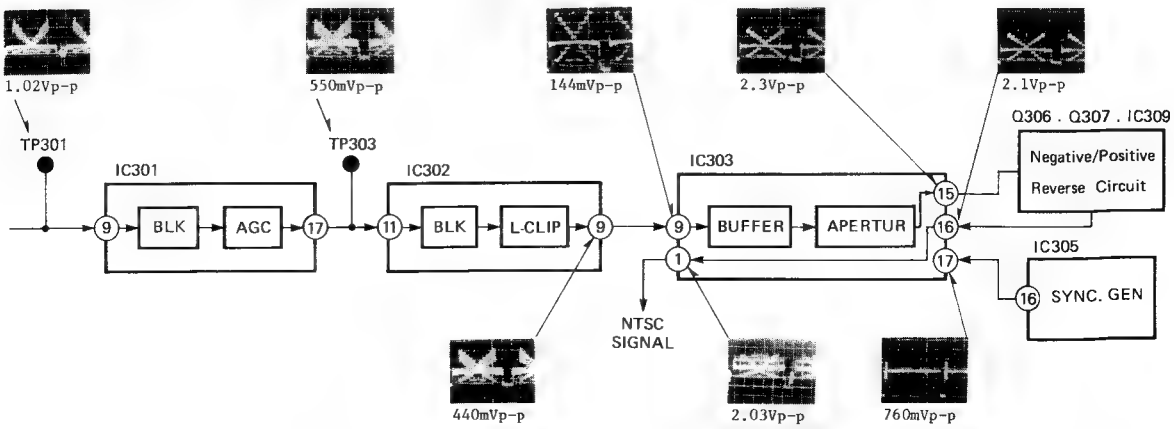

LUMINANCE SECTION

SERVICE FLOW CHART

NO PICTURE

(Defective Iris Circuit)

·When checking the iris circuit, be sure to place the Auto/Manual iris selector switch to the "MANUAL" position and open the iris fully.

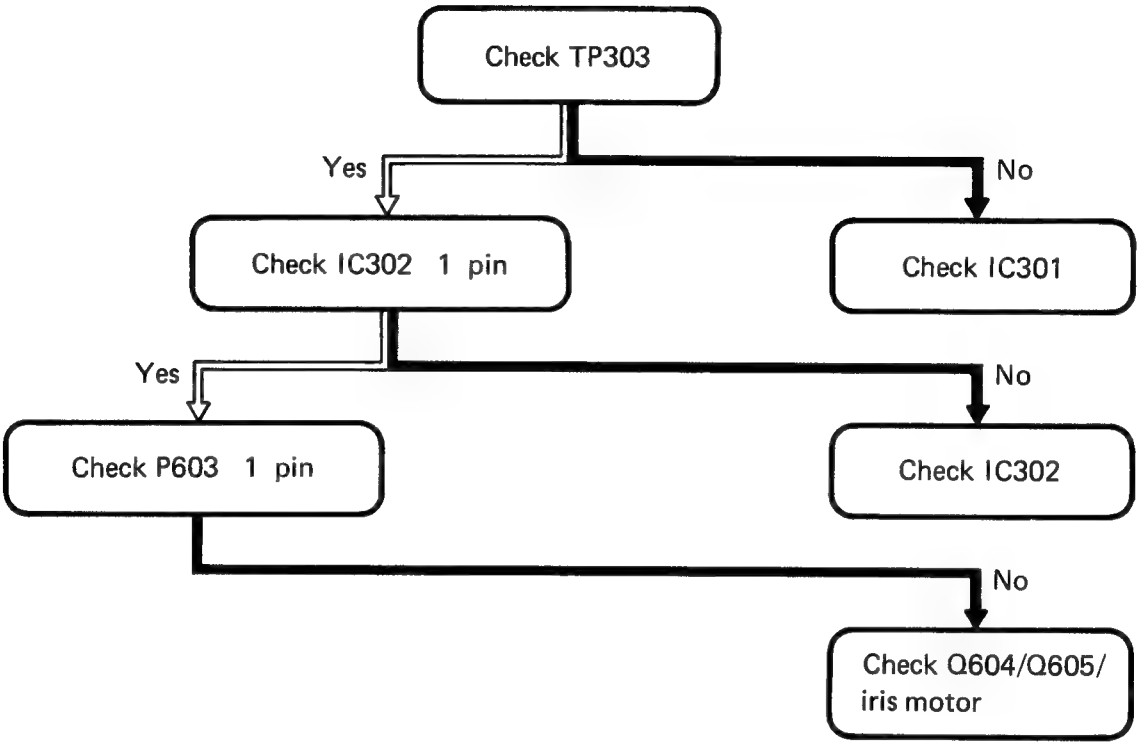

SIGNAL FLOW CHART

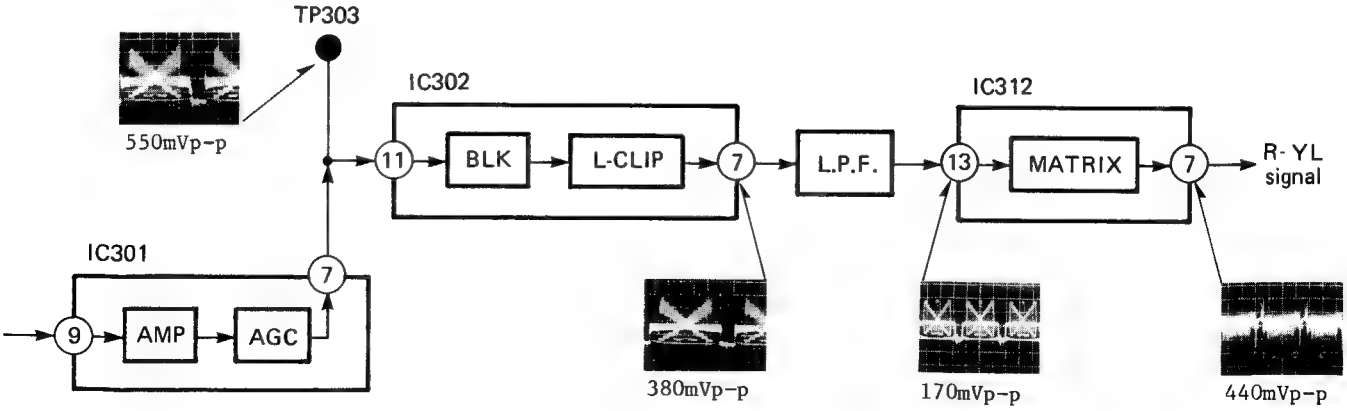

LUMINANCE SECTION

SERVICE FLOW CHART

NO PICTURE

(Defective Negative/Positive Reverse Circuit)
If there is no reverse picture, IC309 is the suggested place to start the checking.

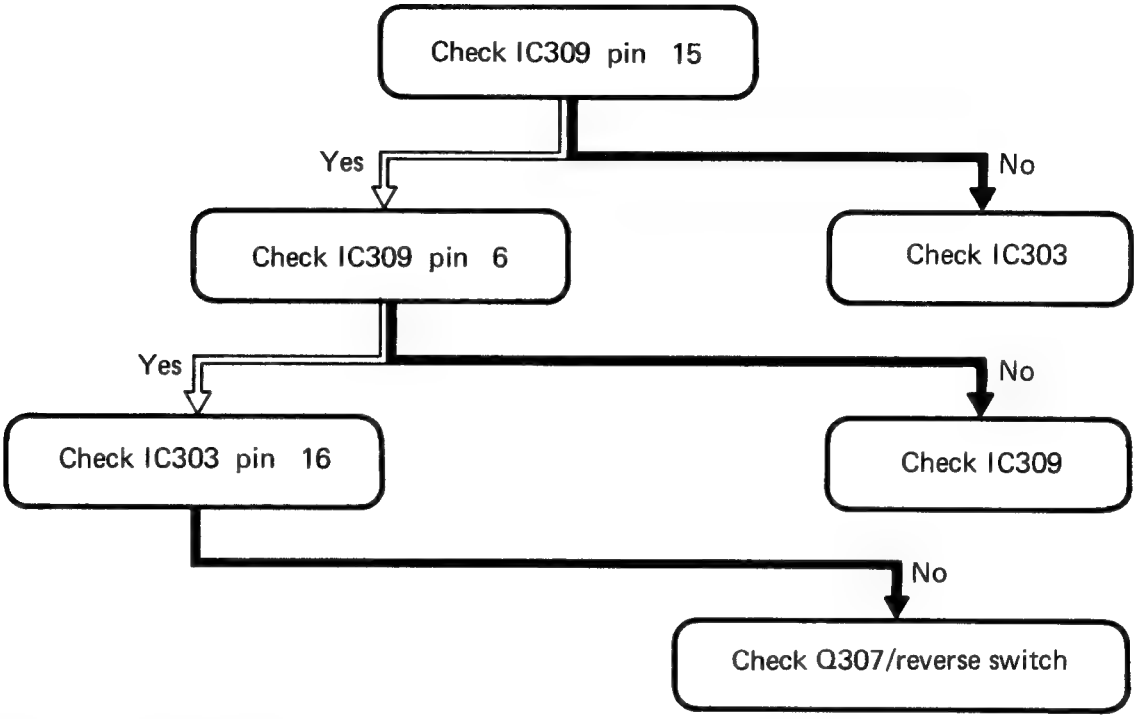

SIGNAL FLOW CHART

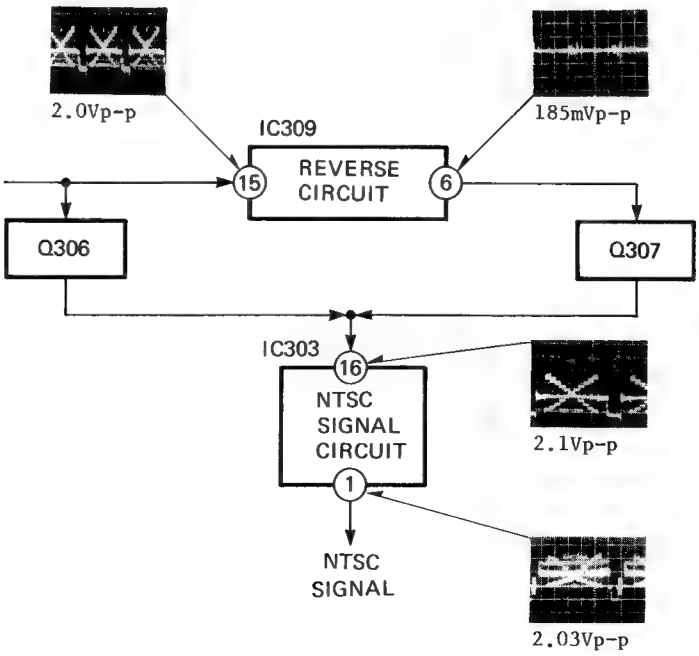

CHROMINANCE SECTION

SERVICE FLOW CHART

NO COLOR

If there is no color, pin 2 of IC307 is the suggested place to start checking.

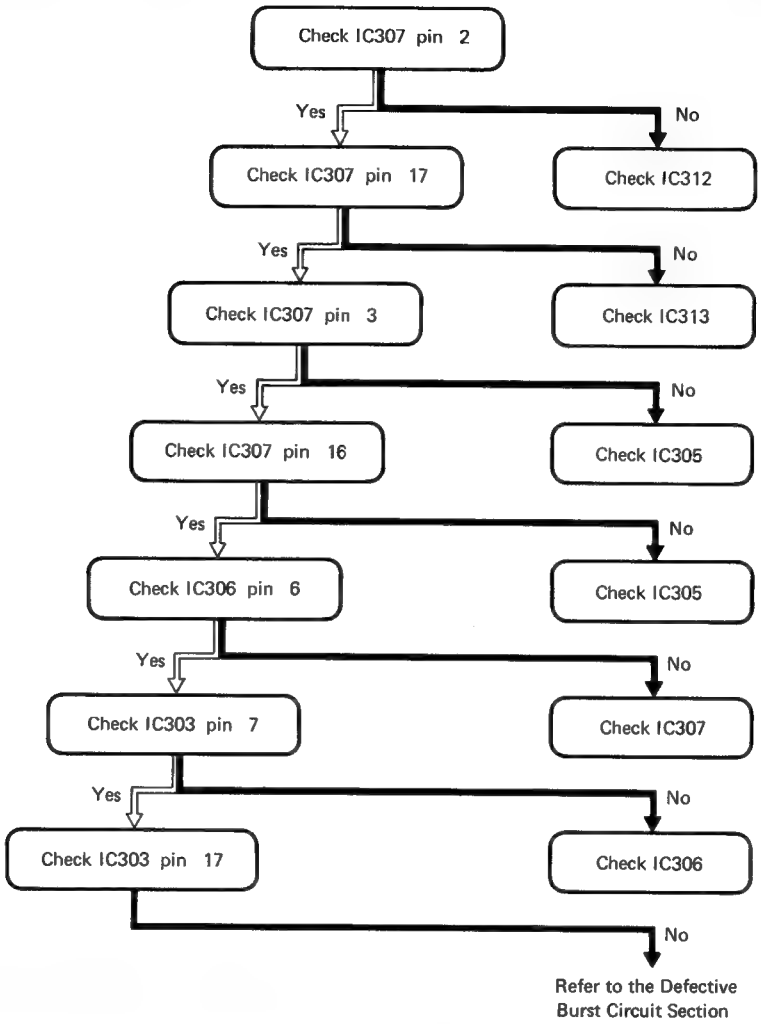

SIGNAL FLOW CHART

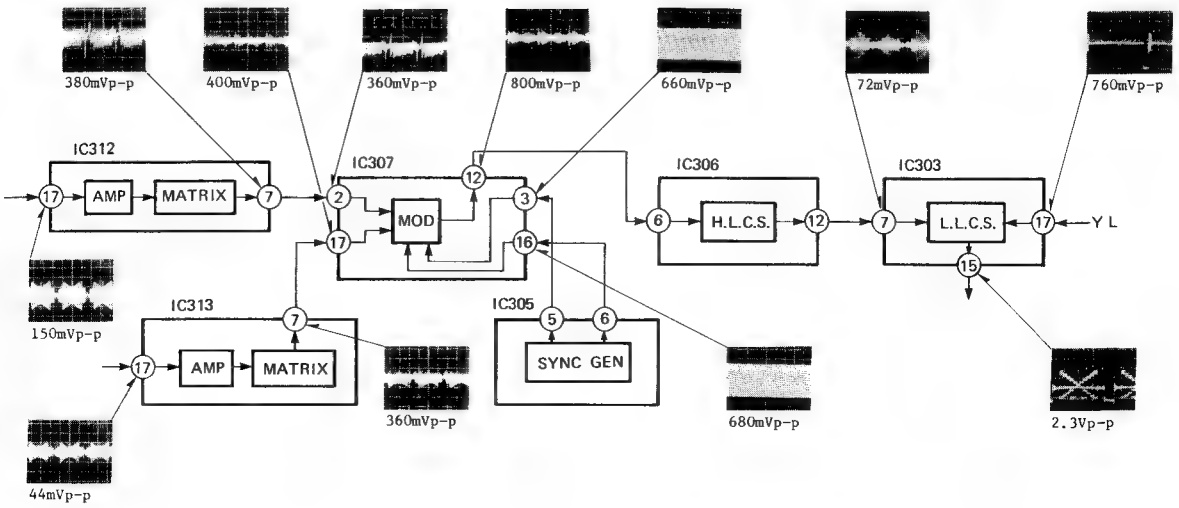

CHROMINANCE SECTION

SERVICE FLOW CHART

NO COLOR

(Defective Burst Circuit)

If there is no burst, IC305 is the suggested place to start the checking.

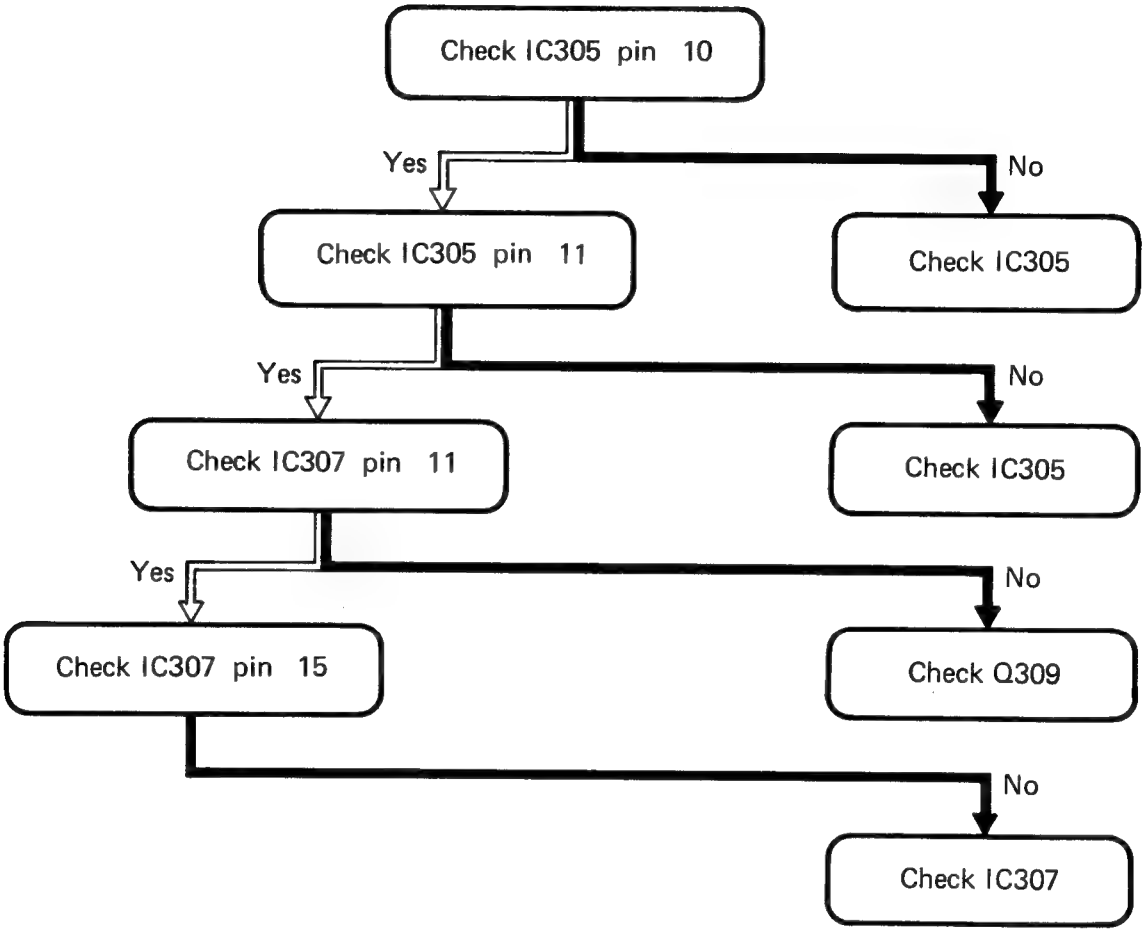

SIGNAL FLOW CHART

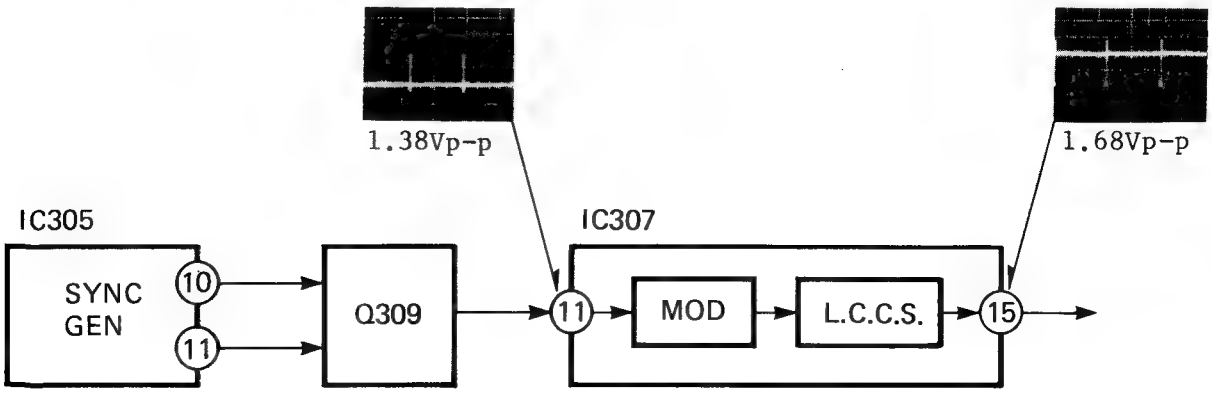

CHROMINANCE SECTION

SERVICE FLOW CHART

NO RED AND BLUE

If there is no red and blue, IC301 is the suggested place to start the checking.

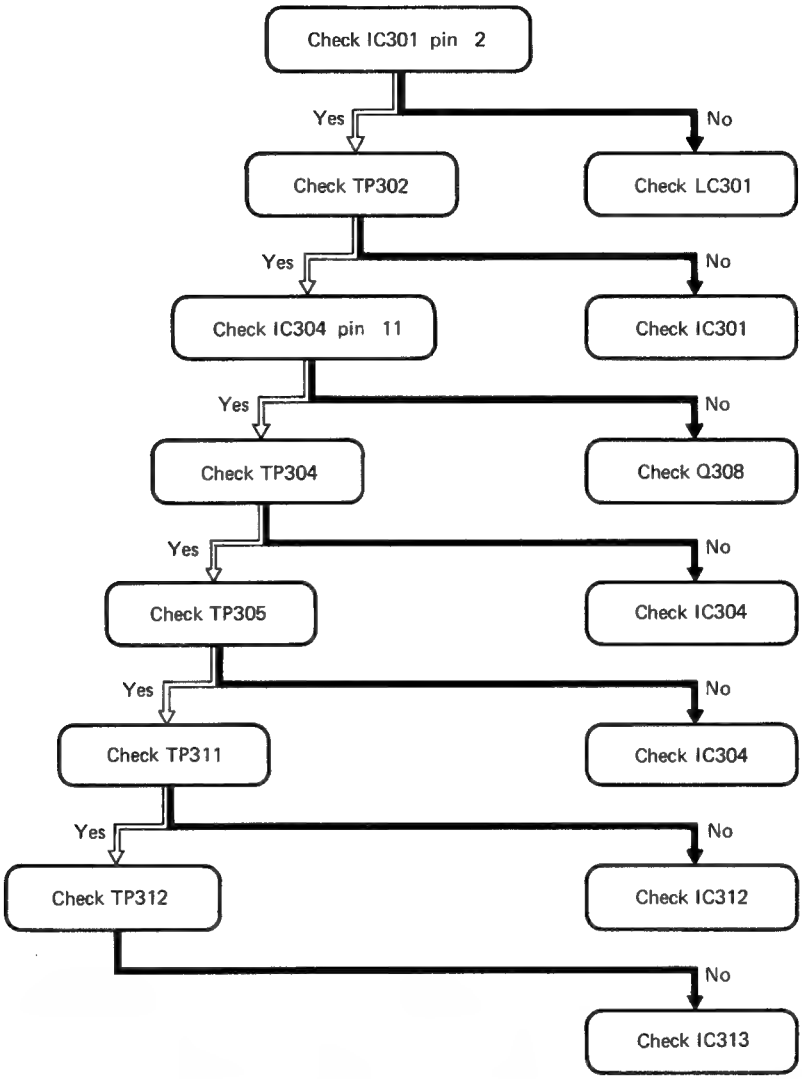

SIGNAL FLOW CHART

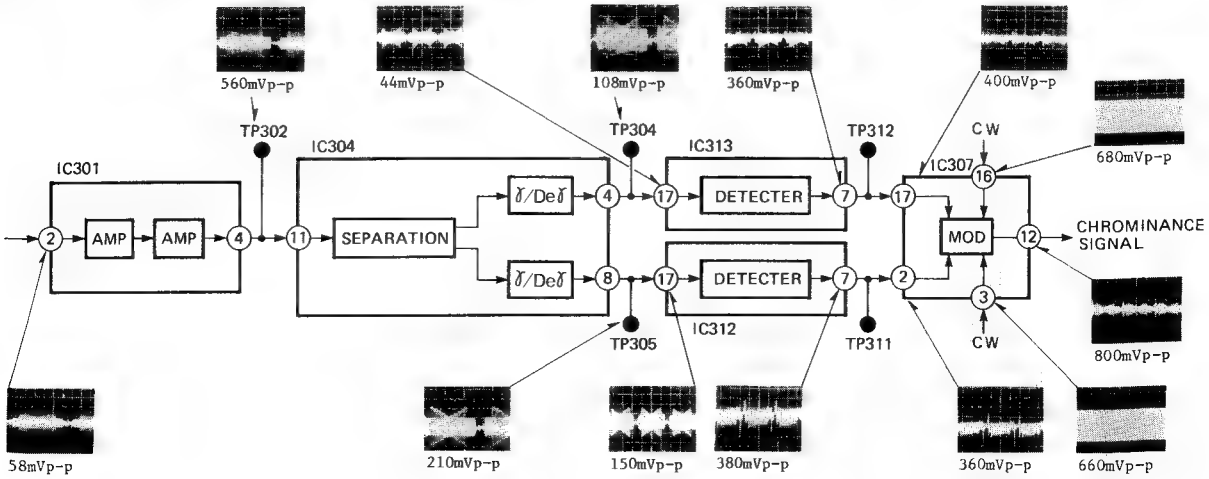

CHROMINANCE SECTION

SERVICE FLOW CHART

NO GREEN

If there is no green, TP303 is
the suggested place to start the checking.

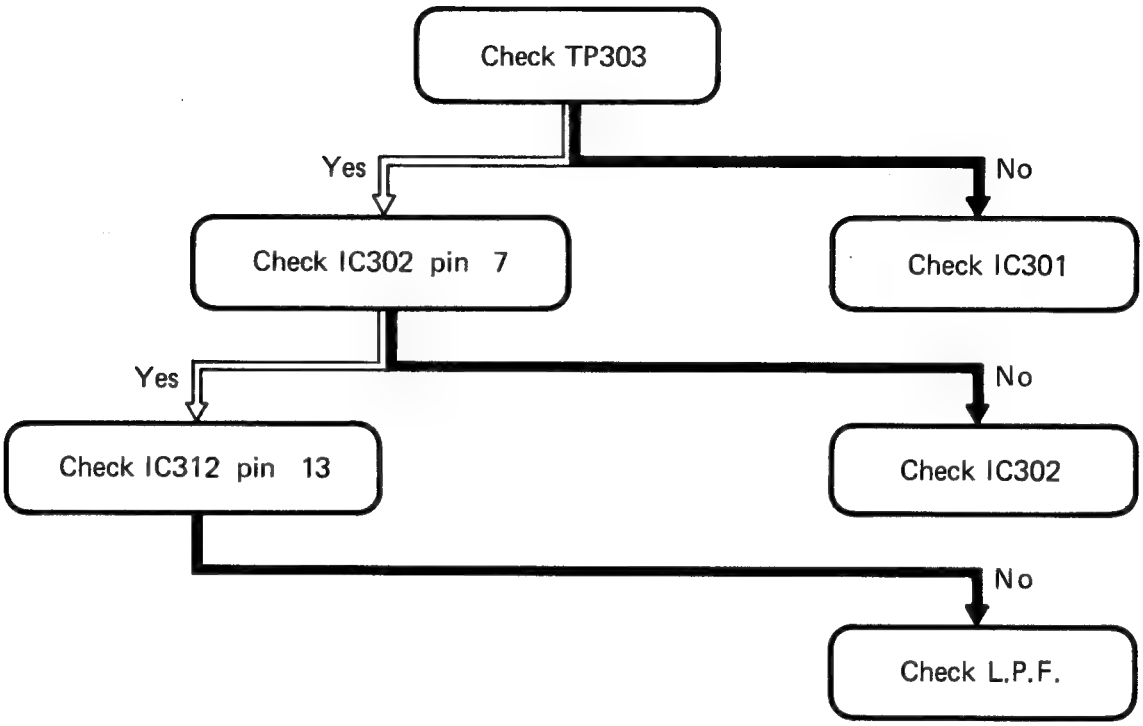

SIGNAL FLOW CHART

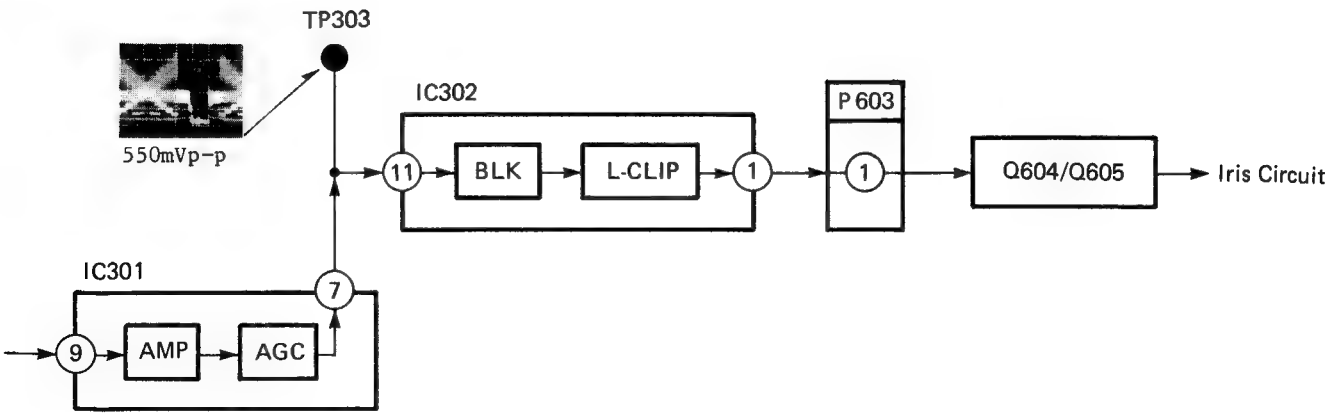

Trouble Shooting Chart For The 5V/7V Power Source

Note: This trouble shooting procedure can only be followed when the camera is connected with a PV-5000 series portable VCR.

(1) 5V is not sent out from TP614.

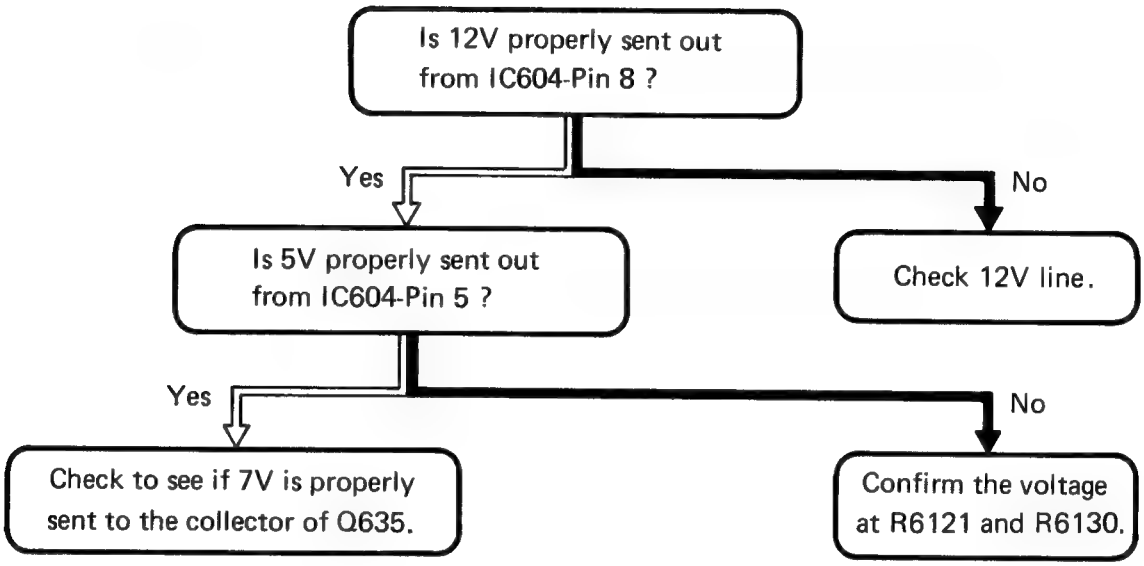

(2) The 5V power source for the micro-computer.

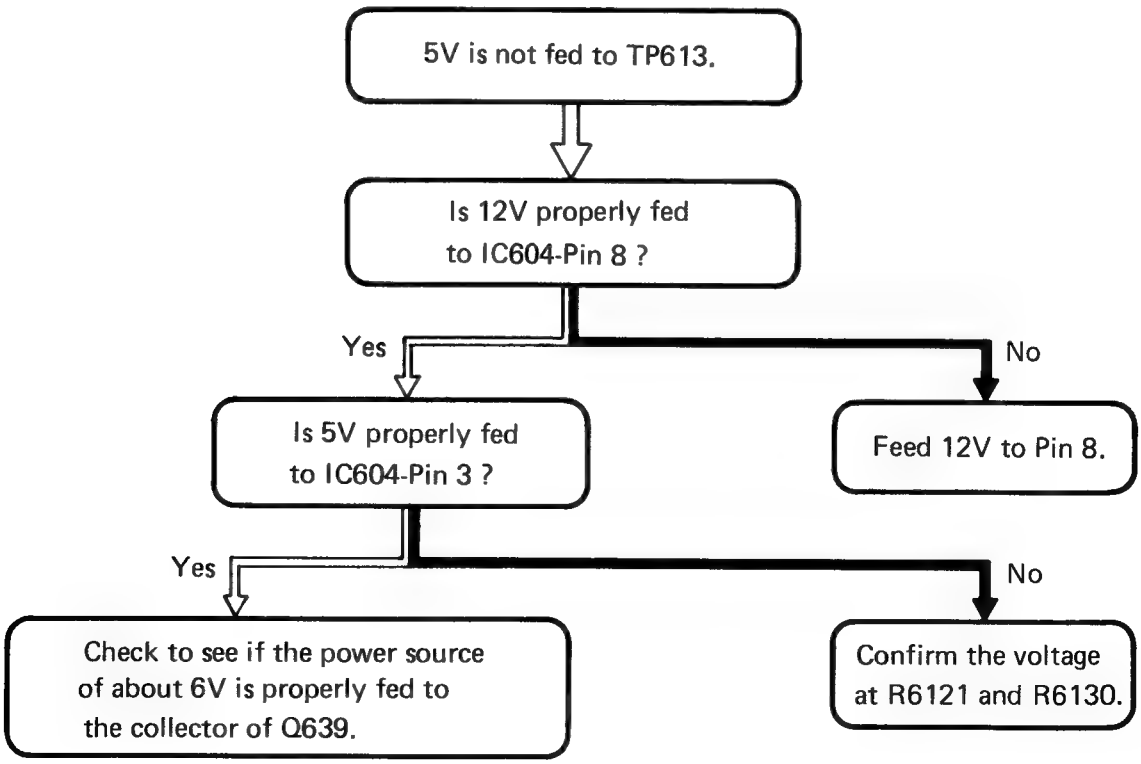

(3) The 5V power source for the micro-computer and AWC circuit when the Stand-by mode is activated.

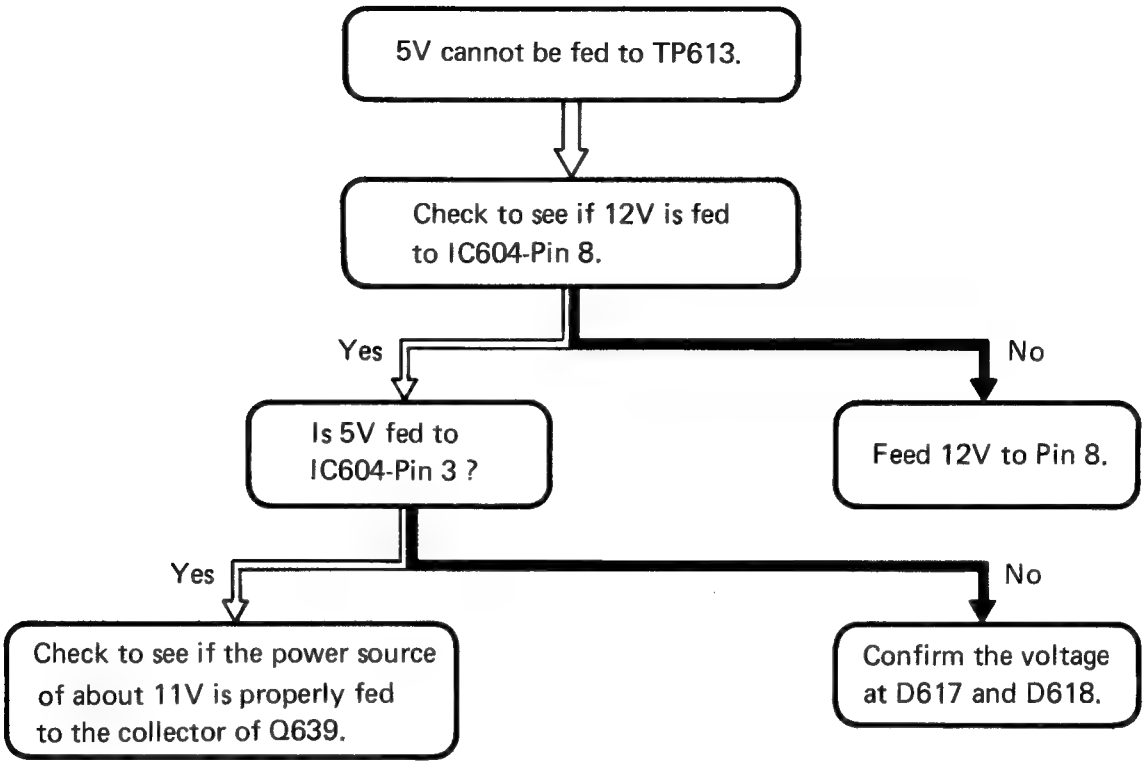

(4) The 7V power source cannot be sent out.

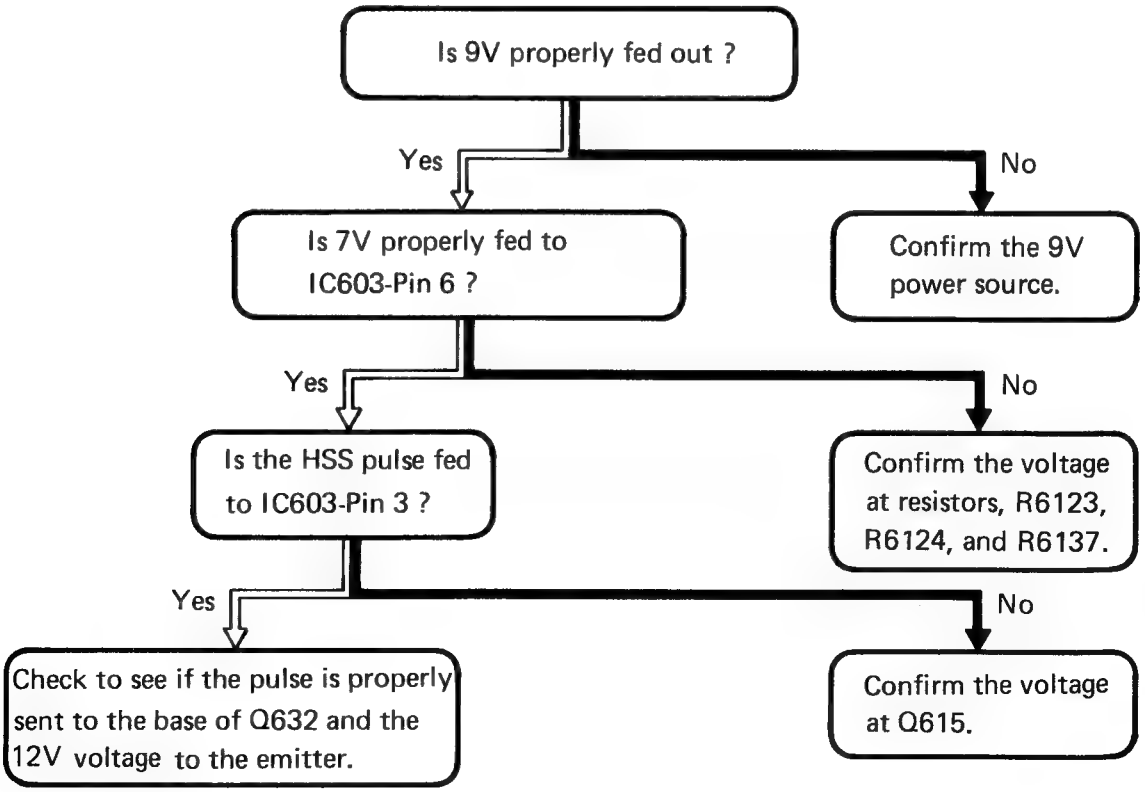

Trouble Shooting Chart For The Micro-Computer

(1) After the power is ON, when the display mode is set either to "TITLE" or to "L.T." and the stand-by switch to OP-1, no display appears at all.

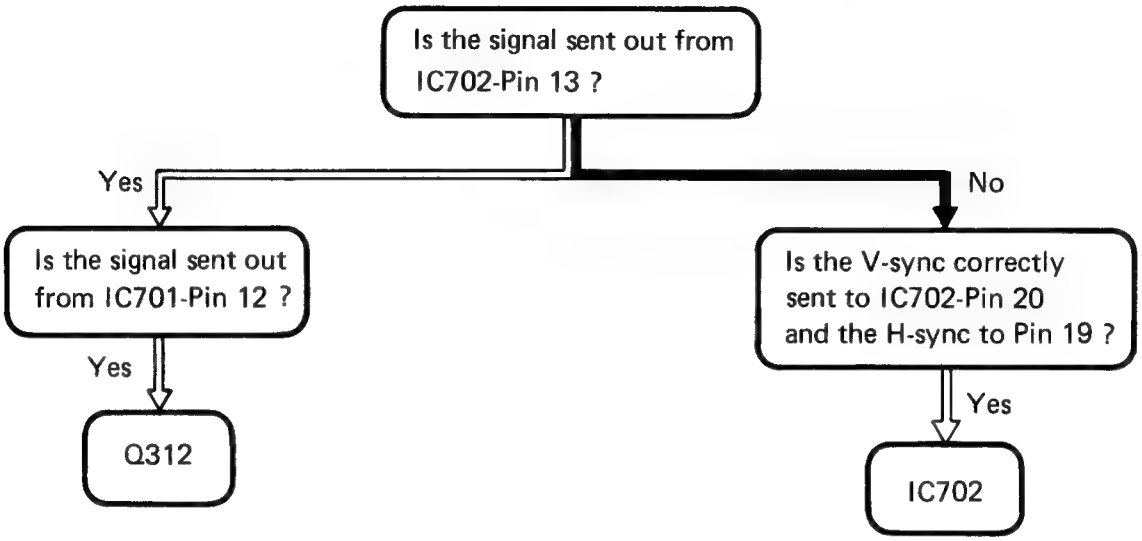

(2) When the power of the portable VCR is turned on and the camera connected with the camera remote sw in the ON position, wait for 3 seconds but the tape can not be loaded.

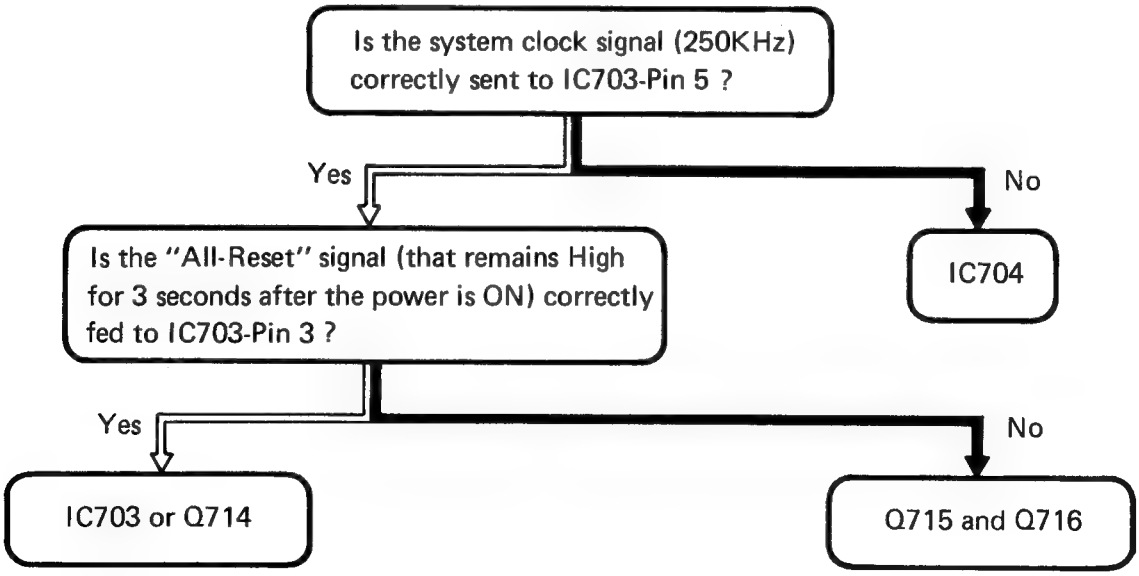

(3) Stop watch does not start counting.

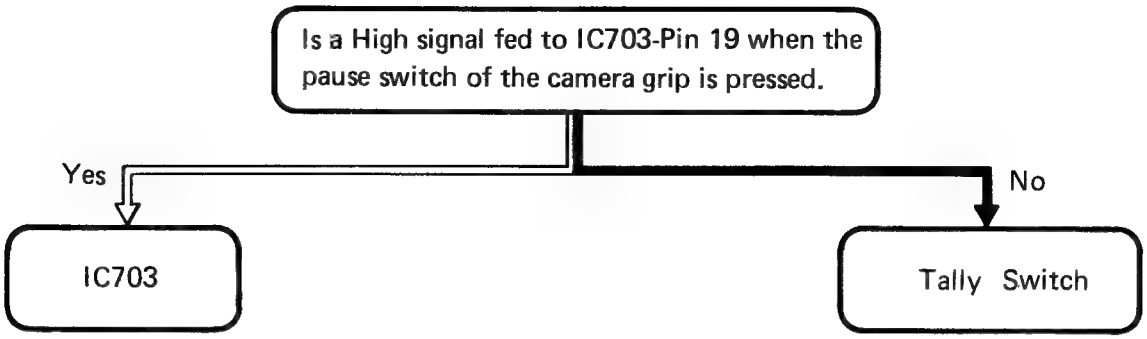

(4) When the VCR and camera are connected, the camera pause switch cannot activate the camera recording and the VCR playback, remaining in Pause.

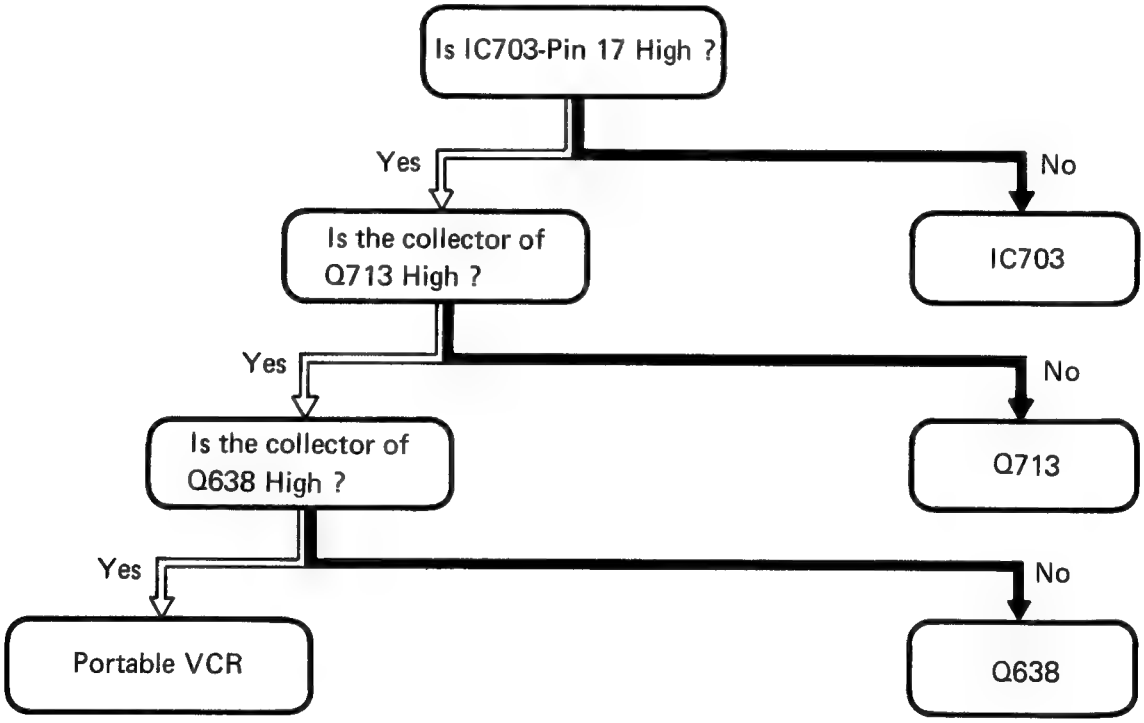

(5) When the Fade switch is ON, Fade cannot be activated.

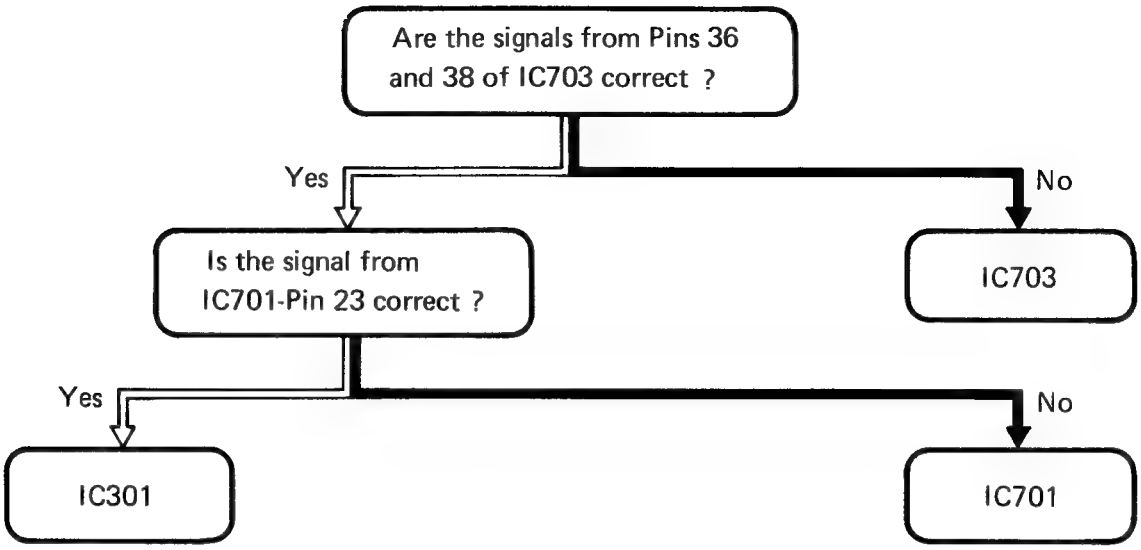

(6) When the Fade switch is ON, white bar does not appear on the EVF (Electronic View Finder).

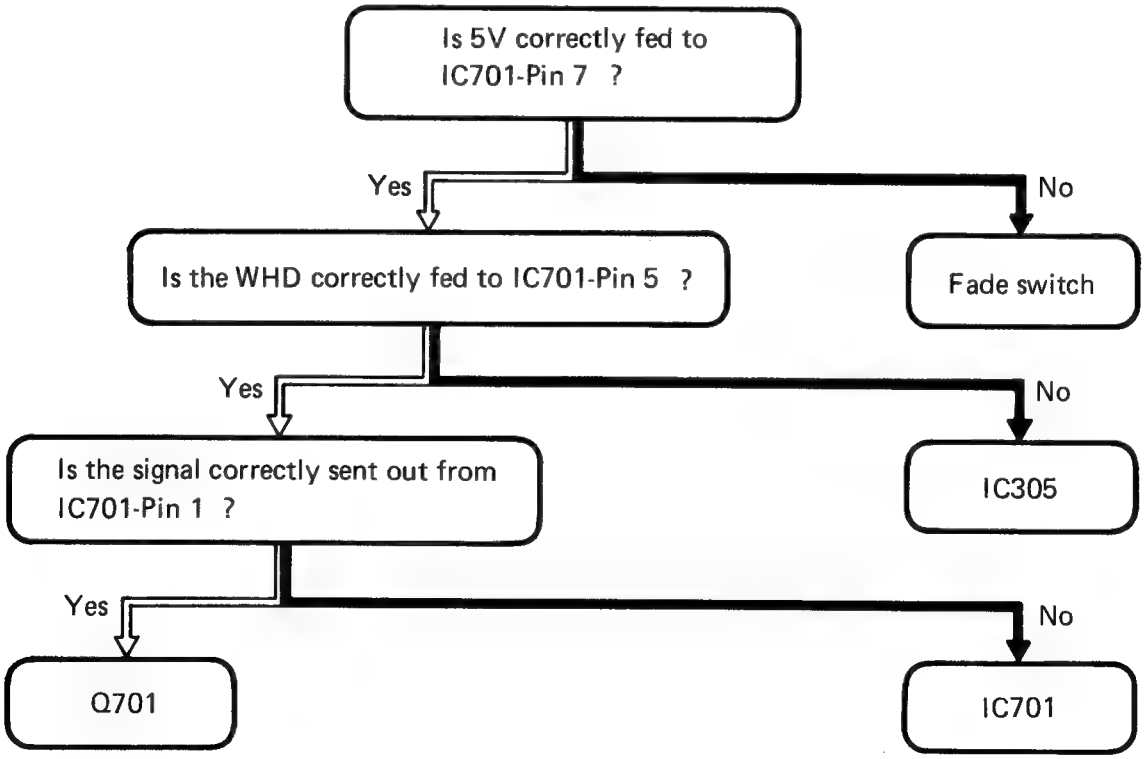

(7) When the Stand-by switch is turned to "OP1" (Display ON) from "OP2" (Display OFF), reset is not activated.

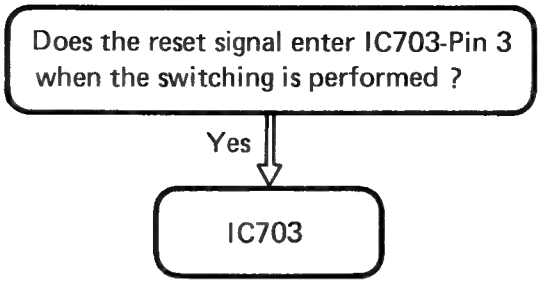

(8) Switching between the camera and the VCR cannot be activated at all.

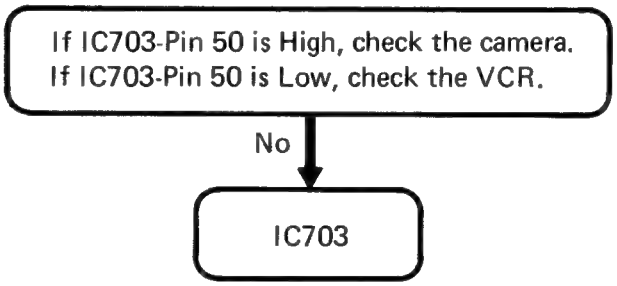

(9) "VCR INF" cannot be displayed.

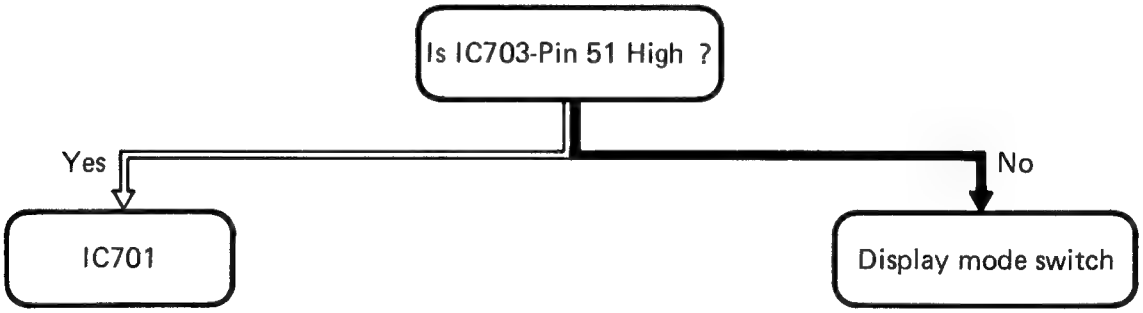

(10) "L.T." cannot be displayed.

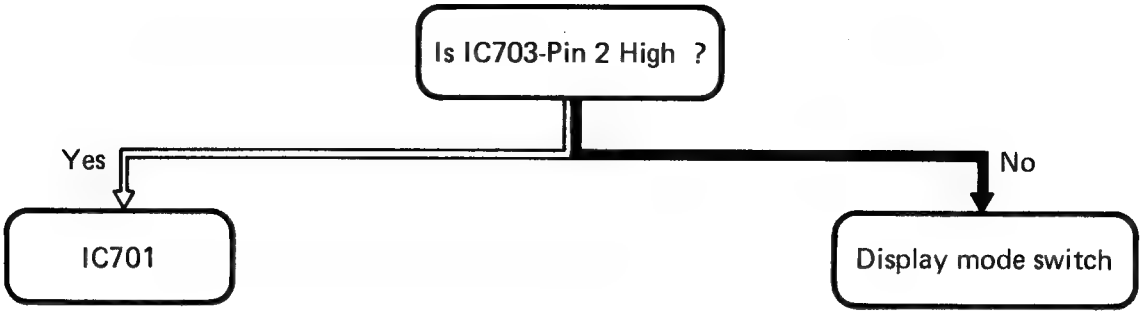

(11) "VCR INF" cannot be displayed on the EVF.

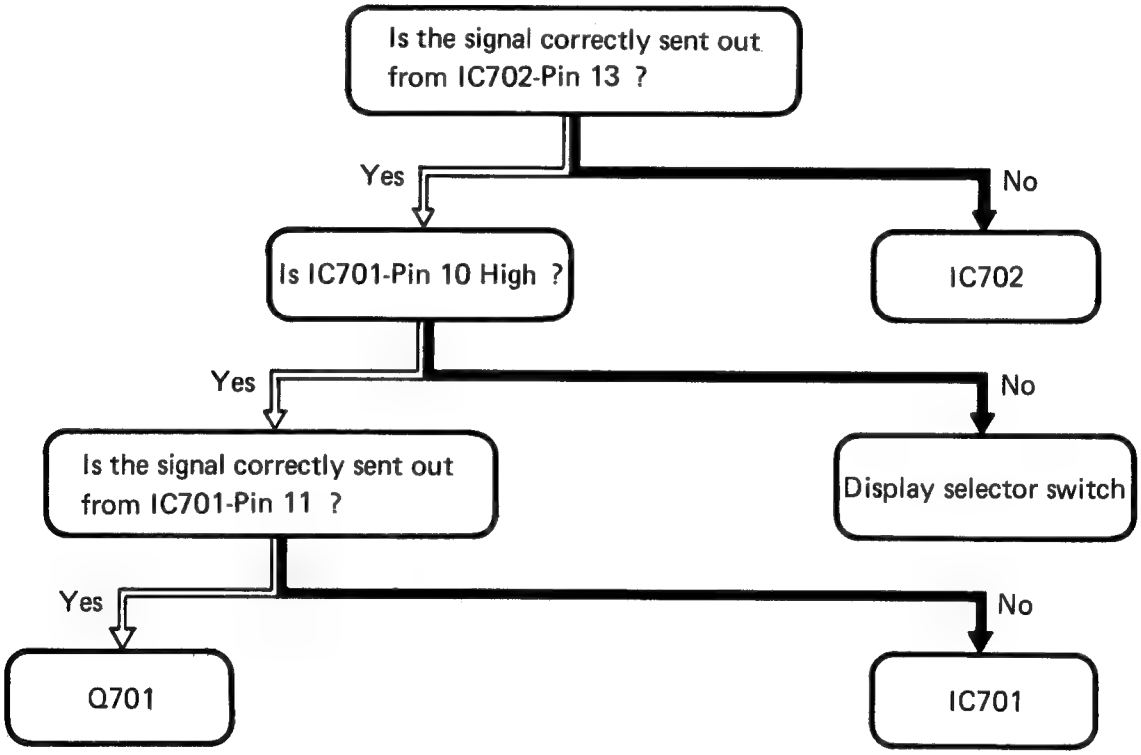

(12) When the "Display" mode is activated, the letter display such as Lapse Time and Title cannot be erased.

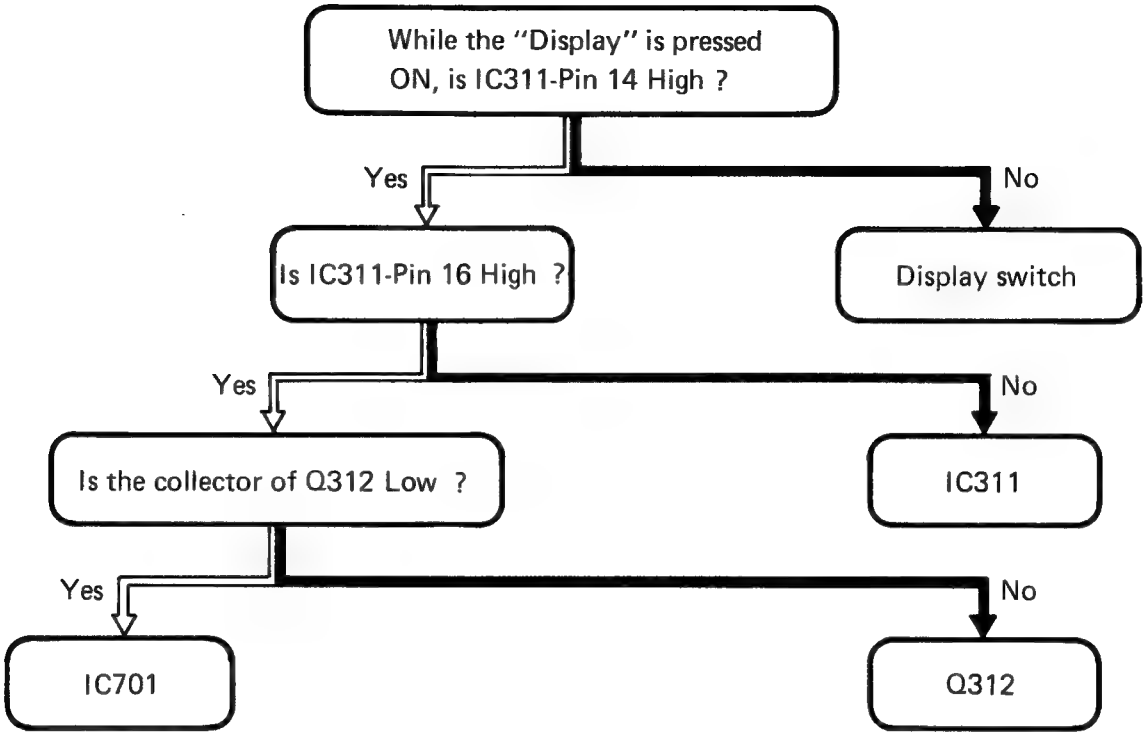

(13) When the camera recording is activated with the VCR connected, both the flash tally LED in the EVF and the Rec LED in front of the CRT (Cathode-Ray Tube) cannot be activated.

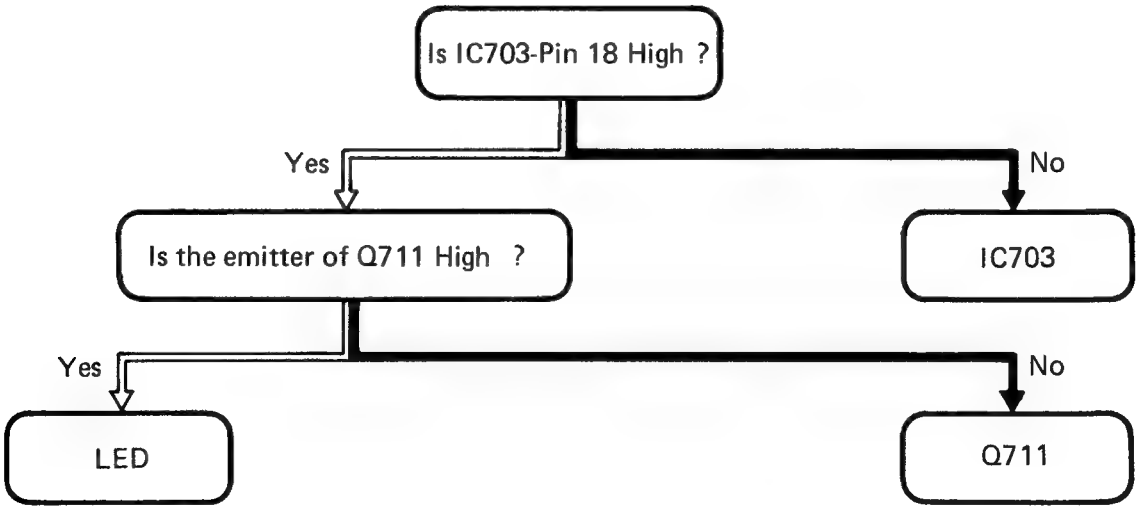

(14) Key operation for any of the "Play/Pause", "Slow", "Cue", and "Review" modes cannot be activated.

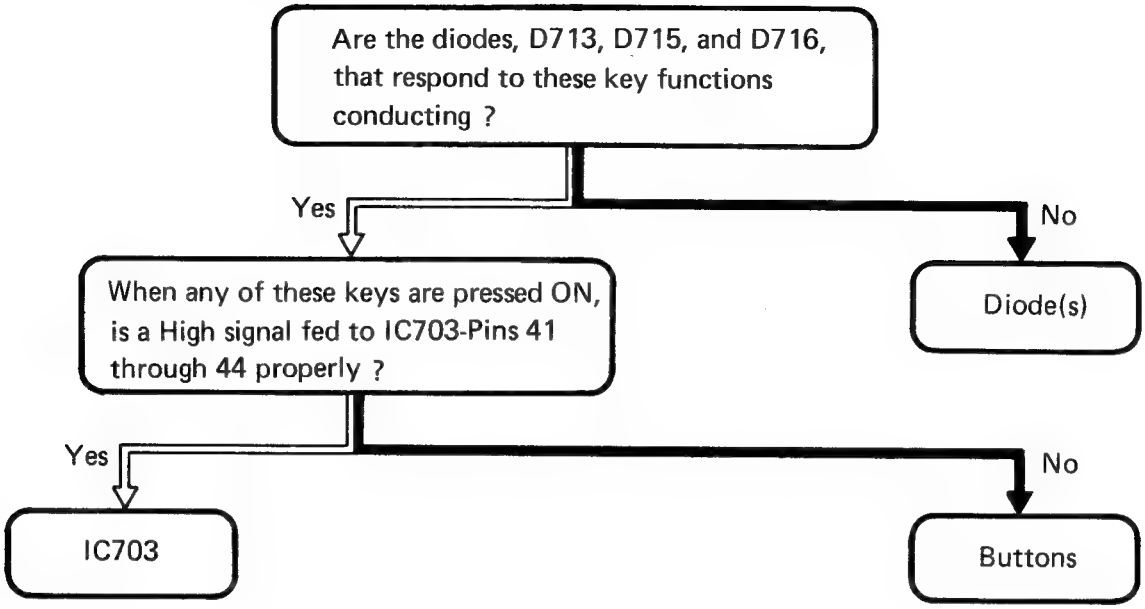

ADJUSTMENT PROCEDURES

Disassembly Method

Caution : Camera Service must be performed in a dust free location to maintain clean lens elements.

1. DISASSEMBLY FLOW CHART

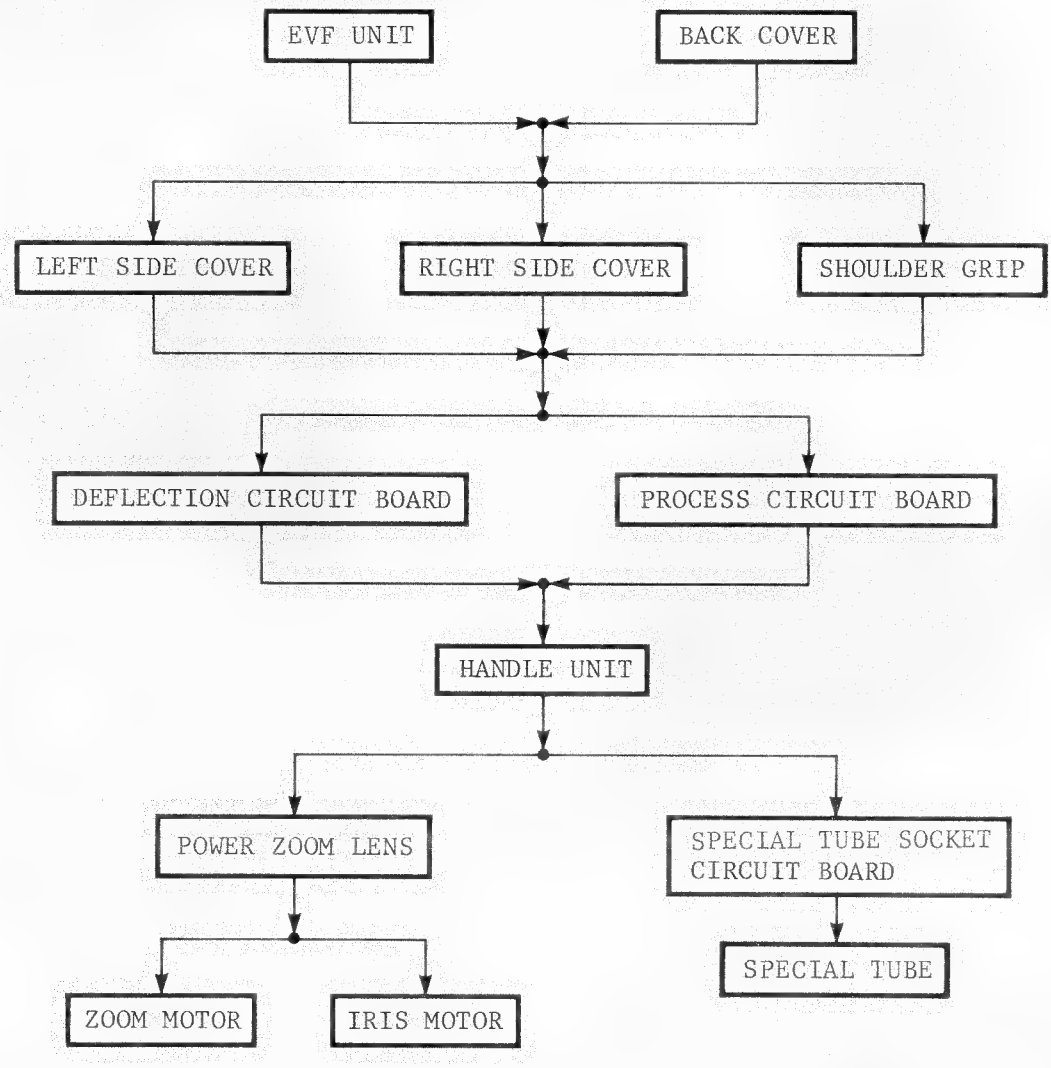

2. DETAILED DISASSEMBLY METHOD

2-1. Removal of EVF Unit
Turn the handle knob (A), then, pull out the EVF cord and remove the EVF unit (see Fig. 1).

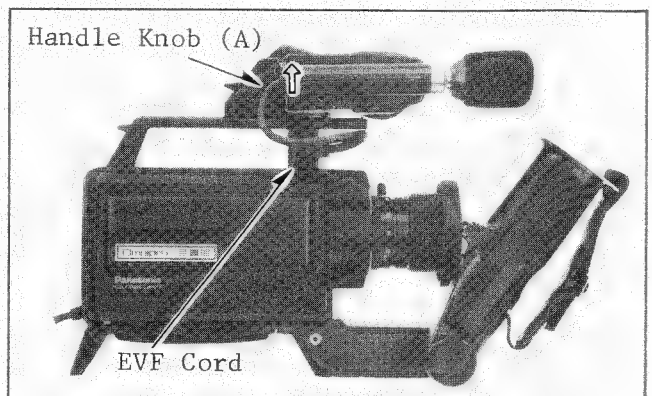

Fig. 1 Left Side View

2-2. Removal of Back Cover
Unscrew 2 screws (A) and remove the back cover (see Fig. 2).

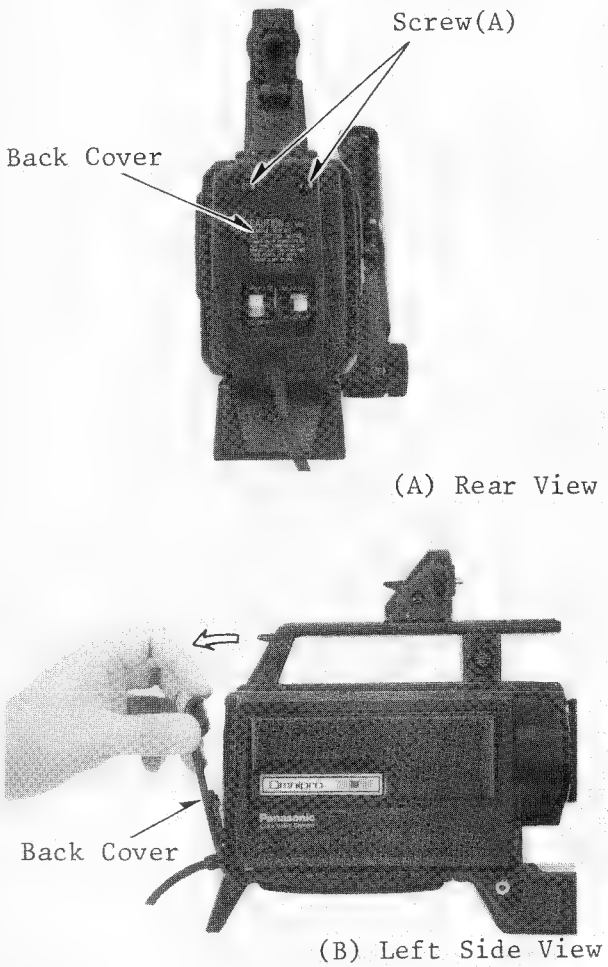

Fig. 2

2-3. Removal of Left Side Cover
a. Move the left side cover to the rear (see Fig. 3-A).
b. Then, remove the left side cover (see Fig. 3-B).

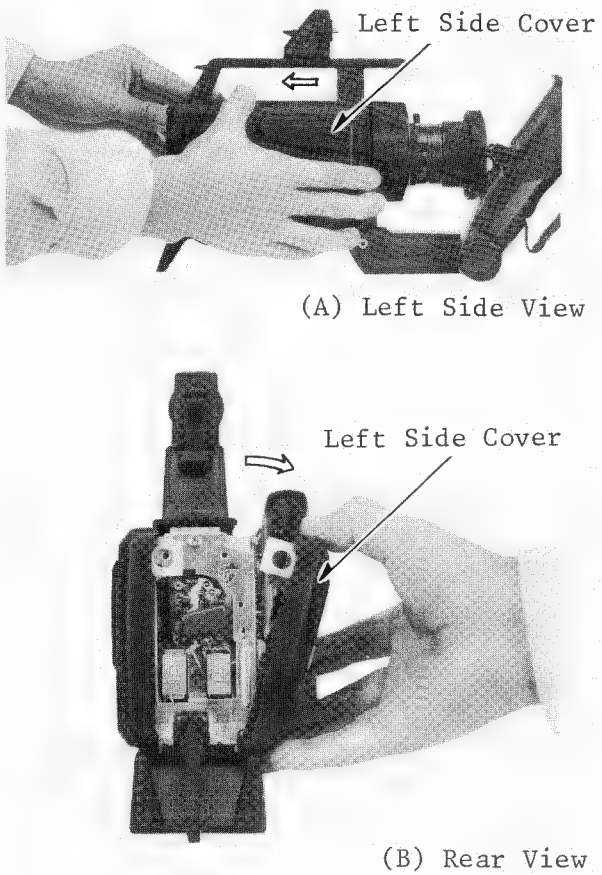

Fig. 3

2-4. Removal of Right Side Cover
a. Move the right side cover to the rear (see Fig. 4-A).
b. Then, remove the right side cover (see Fig. 4-B).

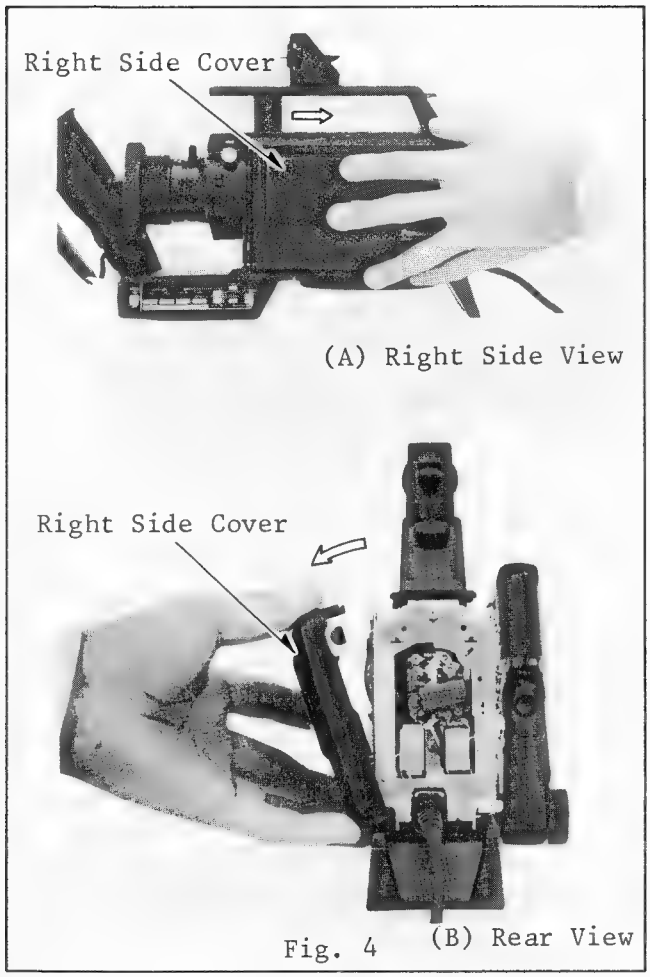

Fig. 4

2-5. Opening of Deflection Circuit Board
Unscrew 2 screws (B) securing the circuit board to the chassis (see Fig. 5).

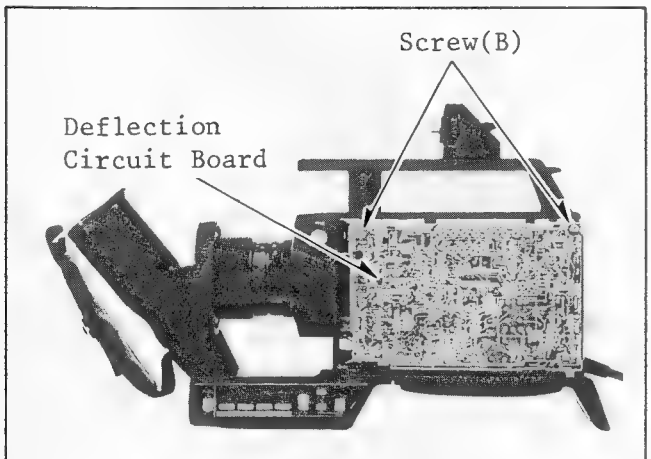

Fig. 5 Right Side View

2-6. Opening of Process Circuit Board
Unscrew 2 screws (C) securing the circuit board to the chassis (see Fig. 6).

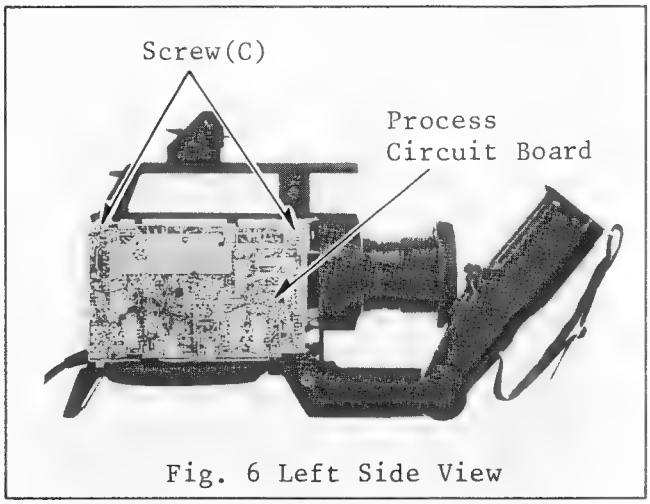

Fig. 6 Left Side View

3. REPLACEMENT OF THE SPECIAL TUBE

3-1. Remove both side covers and open the process circuit and deflection circuit boards (refer to section "Disassembly Method").

3-2. Disconnect 2 connectors (P617 and P602) (see Fig. 7).

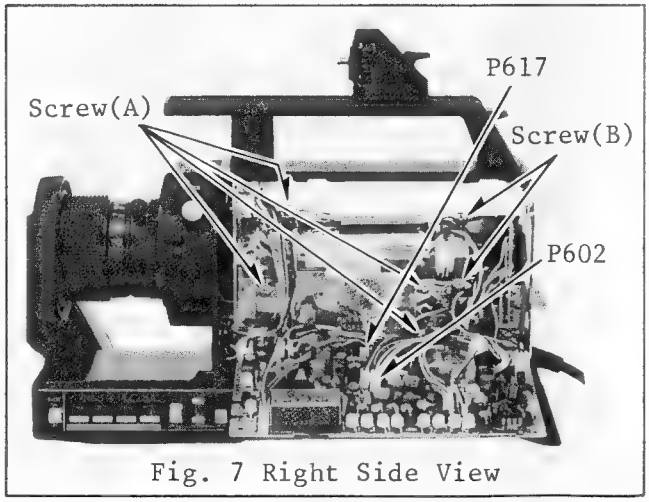

Fig. 7 Right Side View

3-3. Unscrew 4 screws (A) and 2 screws (B) (see Fig. 7).

3-4. Unsolder and remove a ground lead and the preamp. shield cover (see Fig. 8).

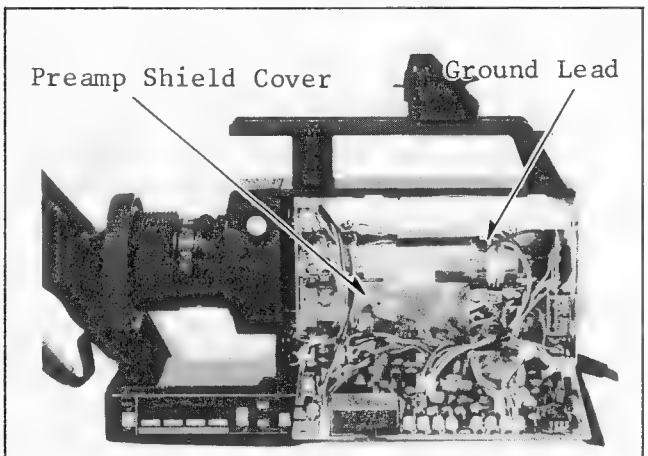

Fig. 8 Right Side View

3-5. Unsolder and remove a white lead from the preamp. circuit board (see Fig.9).

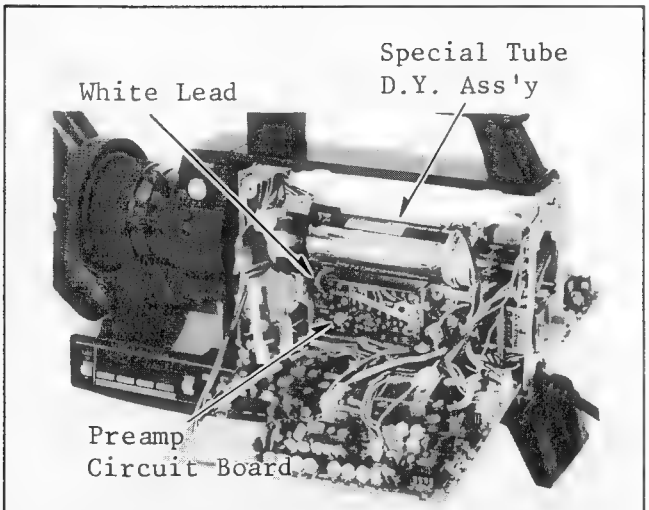

Fig. 9 Right Side View

3-6. Remove the special tube socket circuit board from the special tube (see Fig. 10).

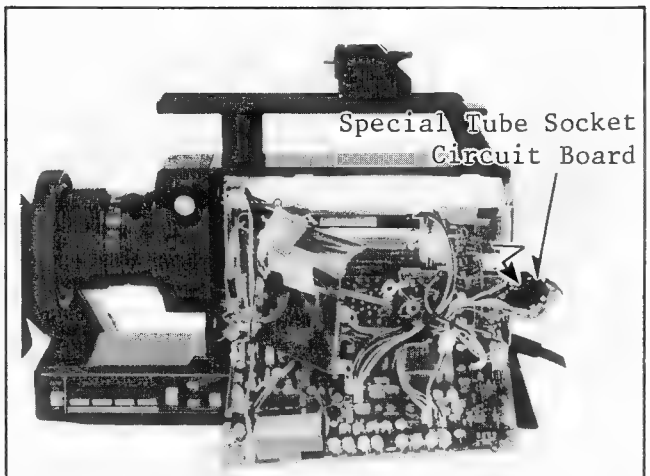

Fig. 10

3-7. Remove the special tube D.Y. assembly with the preamp. shield covered (see Fig. 11).

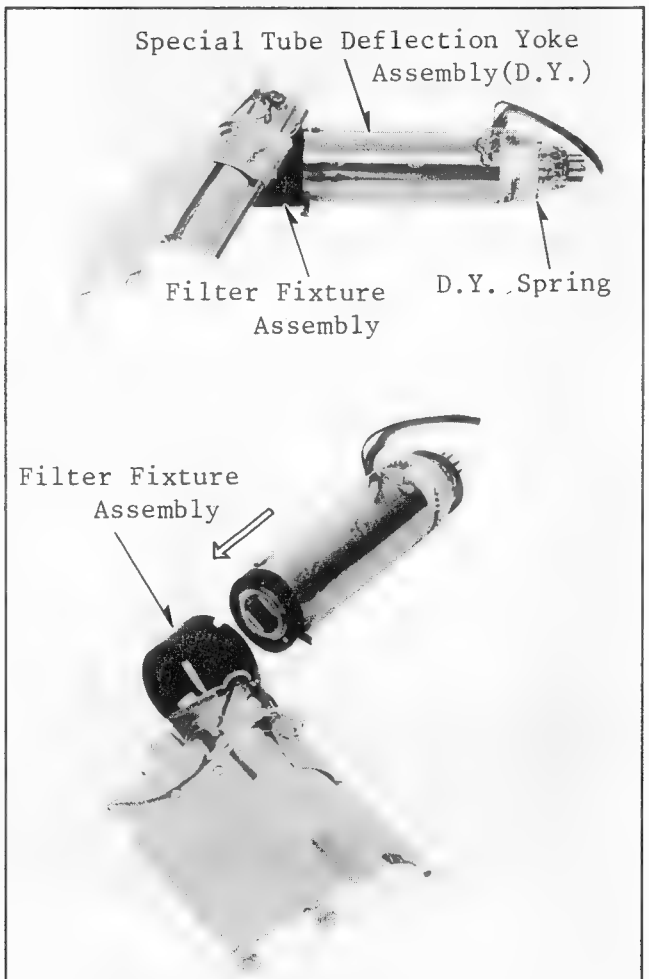

Fig. 11

3-8. Remove the filter fixture assembly and the D.Y. spring from the special tube D.Y. assembly (see Fig. 11-A/B).

3-9. Loosen the clamp screw and remove the special tube from the deflection yoke assembly (D.Y.) (see Fig. 12).

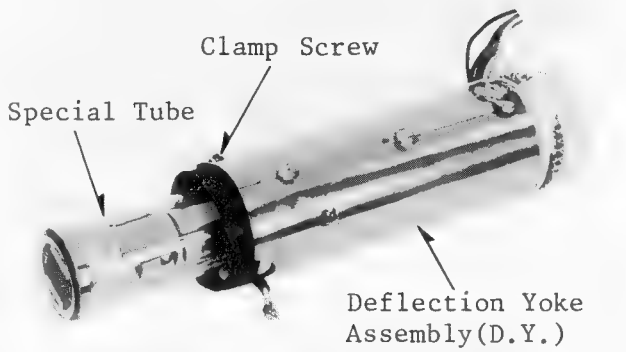

Fig. 12 Special Tube and D.Y.

3-10. Install the new special tube (K4103) in the deflection yoke assembly as shown in Fig. 13.

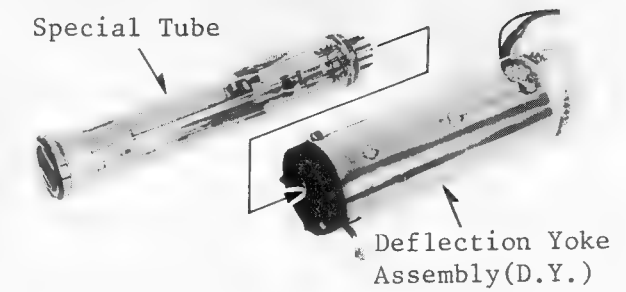

Fig. 13 Special Tube and D.Y.

3-11. Line up the plastic tab on the D.Y. assembly with the silver line on the face of the special tube and the mark, "NAI", should be up side as shown in Fig. 14.

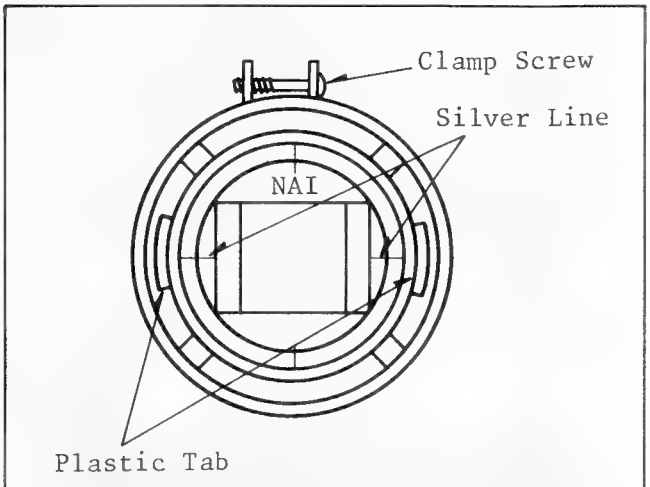

Fig. 14

3-12. Push the special tube in the D.Y. assembly as far as it will go ... using lens cleaning tissue paper to keep the face plate spotless (see Fig. 15).

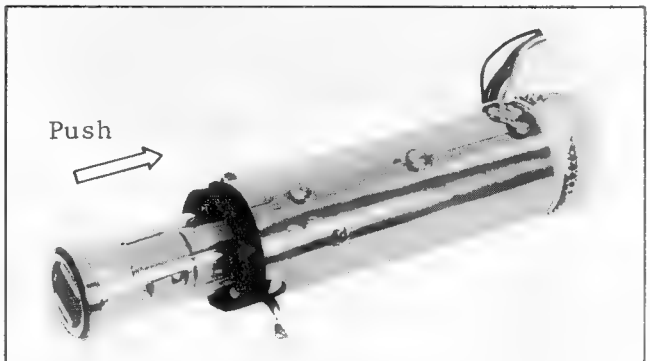

Fig. 15

3-13. Reverse the previous steps.

4. REPLACEMENT OF THE POWER ZOOM LENS

4-1. Remove the both side covers (refer to section "Disassembly Method").

4-2. Remove the shoulder assembly. Unscrew 3 screws (A) and remove the shoulder assembly from the camera head (see Fig. 16-A/B).

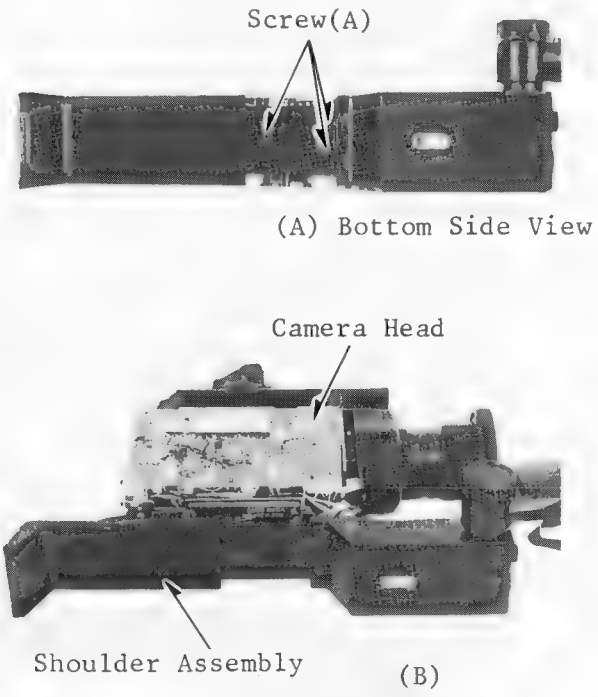

Fig. 16

4-3. Open the process circuit and the deflection circuit boards (refer to section "Disassembly Method").

4-4. Disconnect 2 connectors (connector (Z), P603) (see Fig. 17-A/B).

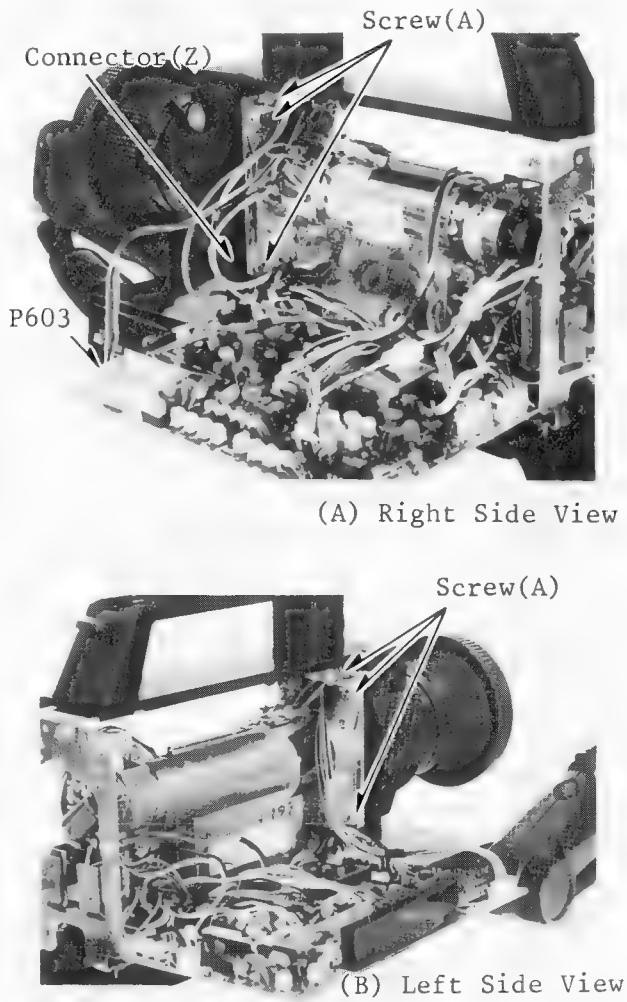

Fig. 17

4-5. Loosen the hex. screw holding the relay lens as shown in Fig. 18.

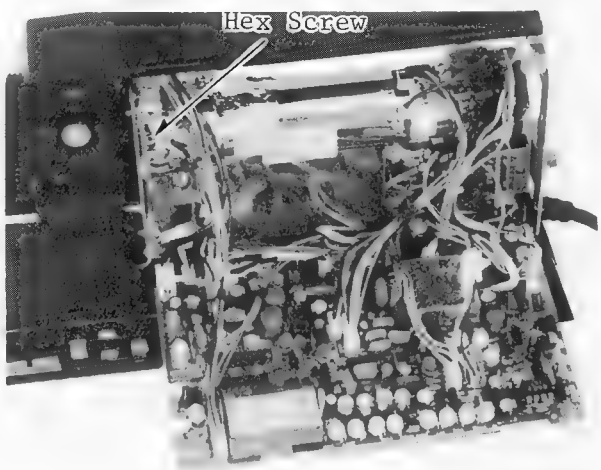

Fig. 18

4-6. Unscrew 6 screws (A) and remove the lens assembly (see Fig. 19).

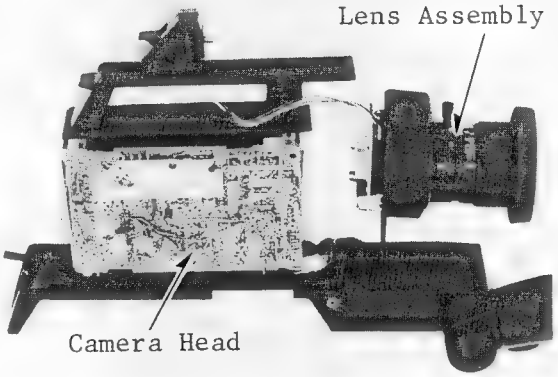

Fig. 19

4-7. Install the new zoom lens ... using lens cleaning tissue paper to keep the lens spotless.

4-8. Reverse the previous steps.

5. REPLACEMENT OF ZOOM MOTOR

5-1. Remove the lens assembly (refer to section "Replacement of the power zoom lens).

5-2. Unscrew 2 screws (A) and remove the zoom motor (see Fig. 20-A/B).

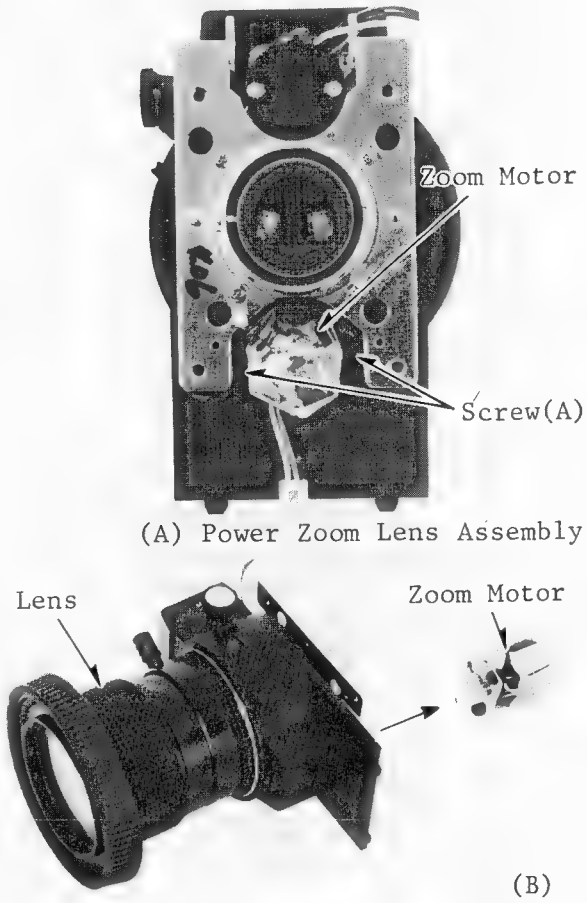

Fig. 20

5-3. Install the new zoom motor.

5-4. Before assembling the power zoom lens to the chassis, confirm that there are no spots on the lens surface.

5-5. Reverse the previous steps.

6. REPLACEMENT OF IRIS MOTOR ASSEMBLY

6-1. Remove the power zoom lens (refer to section "Replacement of the power zoom lens").

6-2. Unscrew 4 screws (A) and remove the lens assembly from the chassis (see Fig. 21).

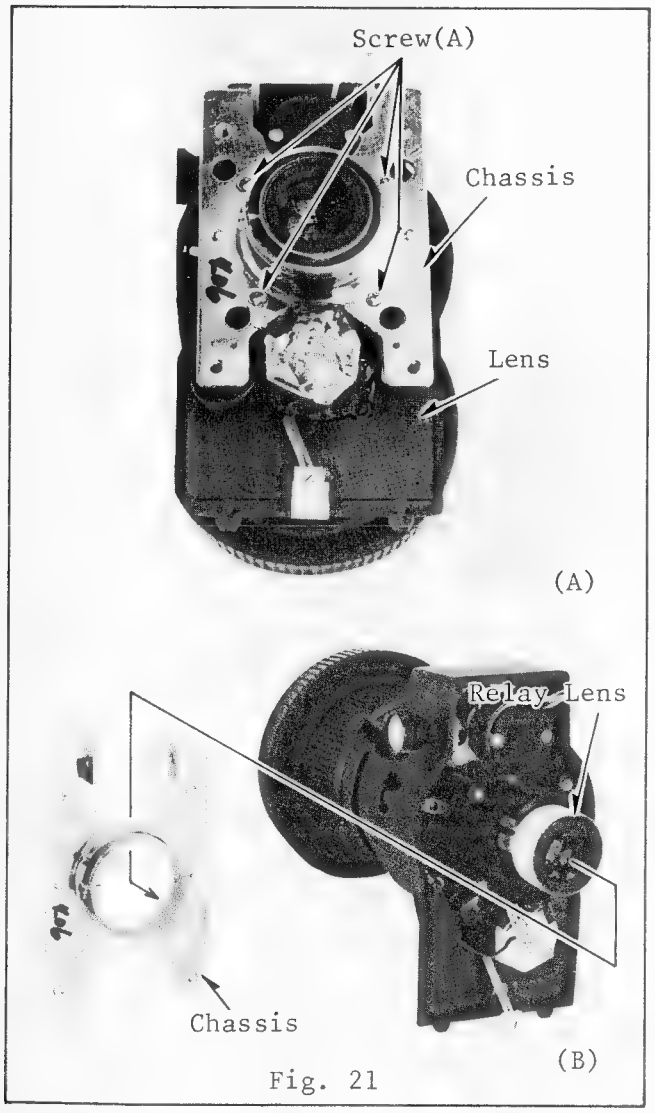

Fig. 21

6-3. Remove the relay lens (see Fig. 21-B).

6-4. Unscrew 4 screws (B) and remove the front cover assembly from the lens (see Fig. 22-A/B).

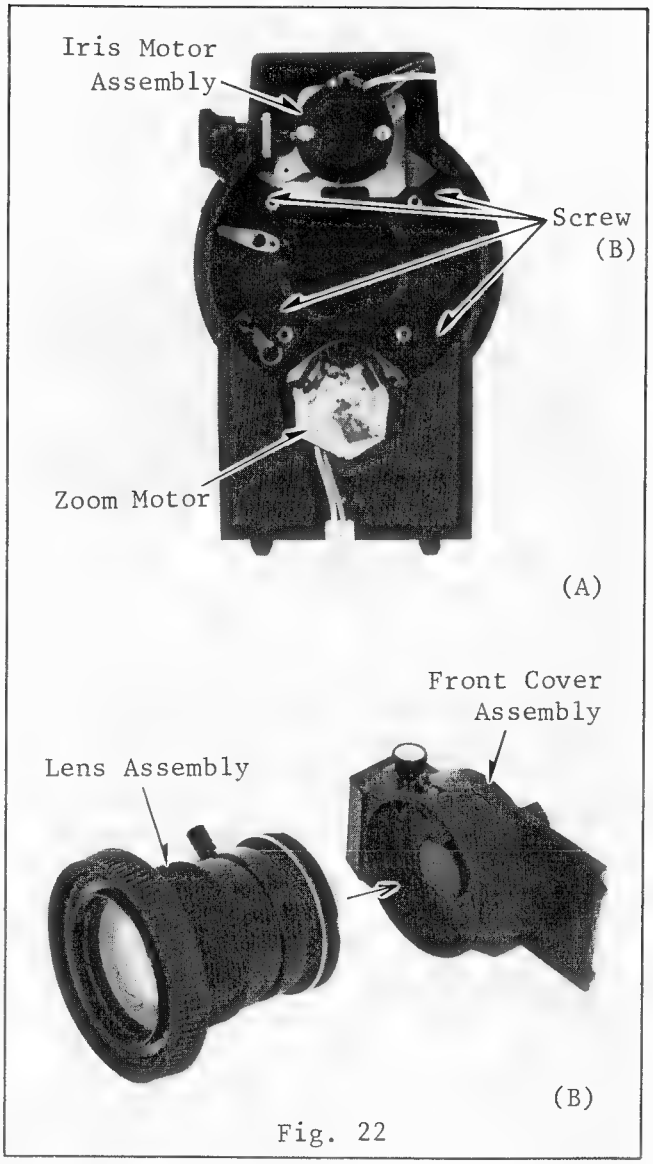

Fig. 22

6-5. Unscrew a screw (C) and remove the color temperature correction switch from the front cover assembly (see Fig. 23).

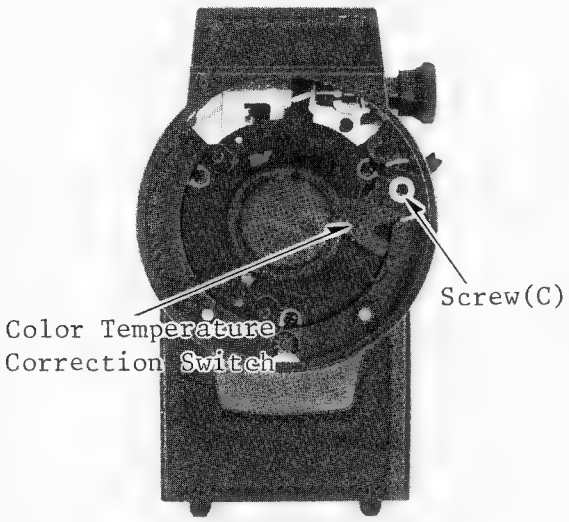

Fig. 23

6-6. Unscrew 3 screws (D) and remove the iris motor assembly (see Fig. 24-A/B).

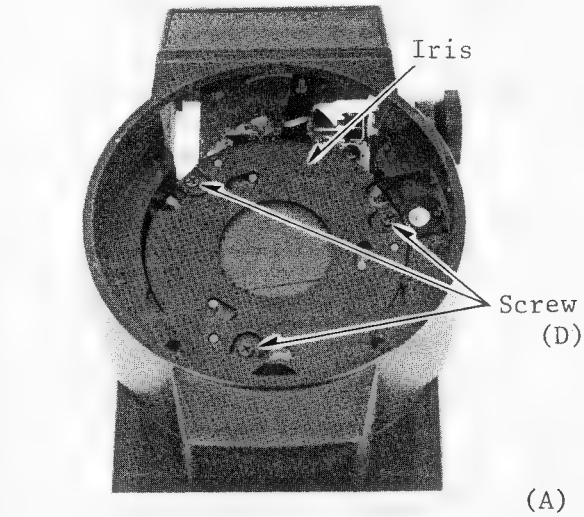

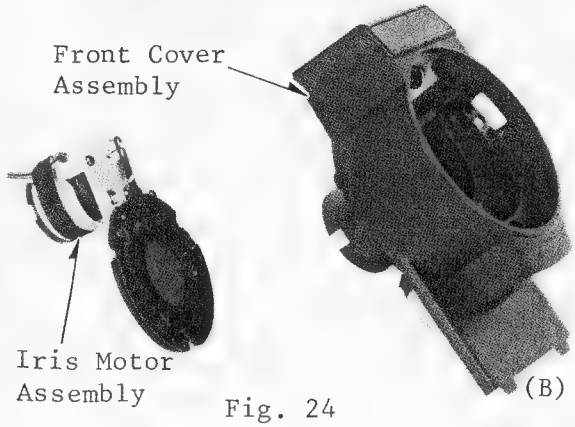

Fig. 24

6-7. Install the new iris motor assembly ... before assembly the iris motor assembly to the front cover assembly, confirm that there are no dust on the iris motor assembly.

6-8. Reverse the previous steps.

MEMO

TEST EQUIPMENT/TOOL LIST

1. Light Box w/Chart

		Part Number
Light Box w/Chart Set	-----	VFKS002
Grayscale Chart	-----	VFKS002A
Color Chart	-----	VFKS002B
Registration Chart	-----	VFKS002C
Resolution Chart	-----	VFKS002D
Light Box	-----	VFKS002Y

Reflection Chart

		Part Number
Reflection Chart Set	-----	VFKS003
Grayscale Chart	-----	VFKS003A
Color Chart	-----	VFKS003B
Registration Chart	-----	VFKS003C
Resolution Chart	-----	VFKS003D
Color Sheet	-----	VFKS003E

2. 3200°K Studio light (See your local photo supply dealer):
   Minimum requirement is 2 flood lights about 350-500 watts each.

3. Luxmeter
   We recommend one of the following:
   A. Portable luxmeter Model No. 3281 by Yokogawa
      Yokogawa Corporation of America
      2 Dart Road Shenandoah, GA 30265
   B. Electronic Foot Candle Meter by Panlux
      Berkey Marketing Company
      25-30 Brooklyn Queens Expressway Woodside,
      New York 11377

4. FM Detector
   Part No. -------- VFKS001

5. Oscilloscope
   Dual Trace, 25mHz, 2mV/DIV.
   Minimum Sensitivity with Delay Mode.

6. Vector Scope

7. VTVM or Digital Voltmeter

8. Tripod

9. Frequency Counter

10. Hex Wrench (1.5mm/7mm).

Electrical Adjustment Procedures

Preparations:

To achieve the best adjustment results, warm up the camera for approximately 30 minutes before adjusting.
To prevent short-circuits between the camera body and the undersides of the process and deflection circuit boards, place insulating tape on those portions of the circuit boards that may come in contact with the camera body.

[1] +9V ADJUSTMENT

CAUTIONS:

Adjust the voltage to +9 volts. This adjustment should always be performed before any other camera adjustments as voltage adjustment will affect overall camera adjustment. Unless complete camera alignment is to be performed, it is not necessary to adjust the voltage if the error is less than ±0.02 volts.

1. To adjust the voltage to +9 volts, connect a voltmeter to the +9 volt regulator at test point TP611 on the deflection circuit board.
2. Adjust +9 V control VR625 so that the voltmeter indicates +9 volts ±0.01 volts.

[2] DEFLECTION CIRCUIT ADJUSTMENT

ADJUSTMENT FLOW CHART OF DEFLECTION CIRCUIT (BOARD)

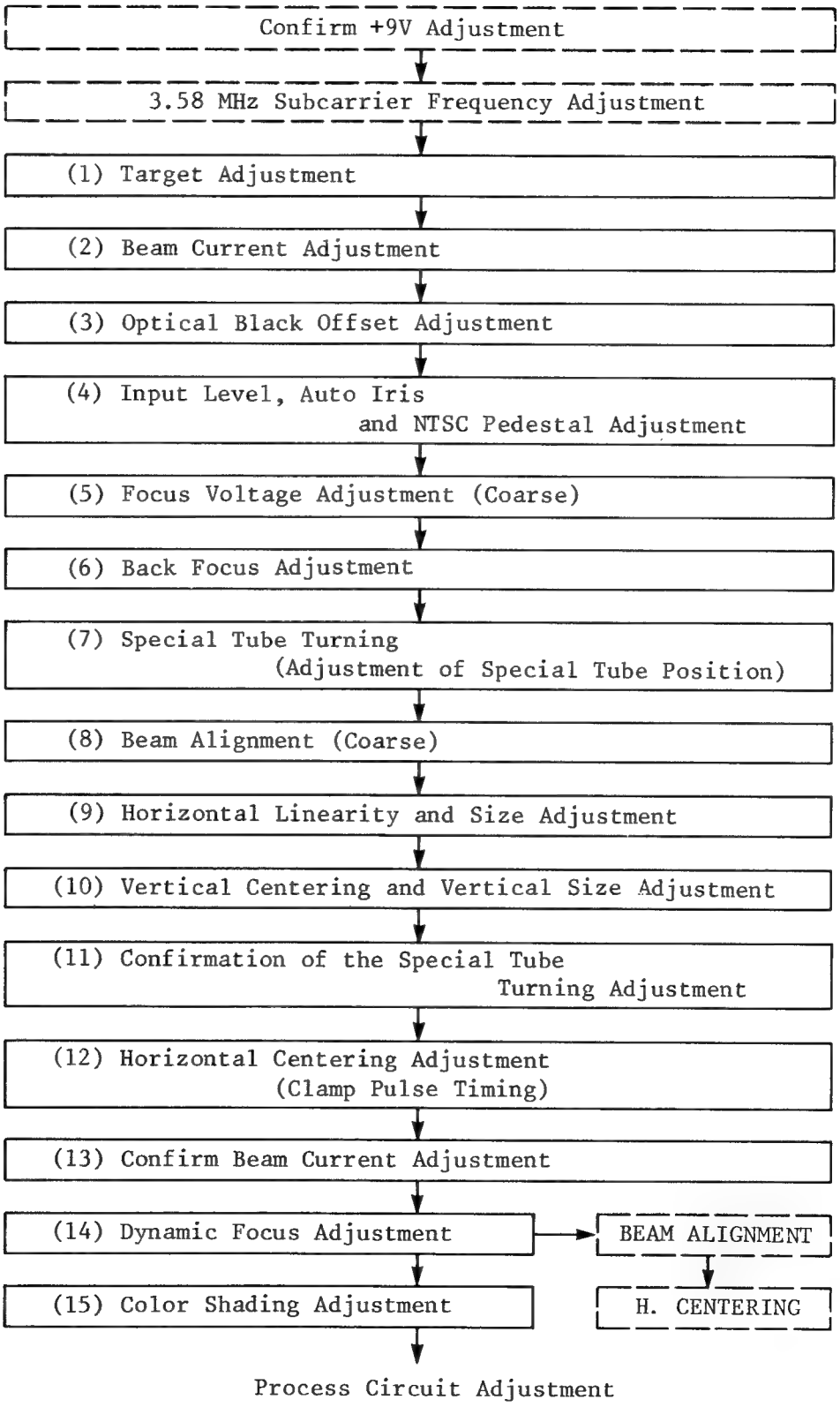

Preparation:

1. Preset the following.

   a) Color Control Knob (White Balance) .... Center position (detent position)
   b) Iris Control Switch .... Manual and close position
   c) Color Temperature Correction Switch .... Indoor position
   d) Standby .... Operate-1 position
   e) Negative/Positive Reverse Switch ..... Normal position

2. Release the Dynamic Focus.

Note: For this procedure, use test point TP607 as the external trigger for the vertical adjustment, and test point TP608 as the external trigger for the horizontal adjustment. This will ensure the flatest response.

TP	Adj.	Chart	Test Instrument	Scope Trigger
TP604	VR609 VR610 VR611 VR612	/	Scope	TP608 HSS TP607 VSS

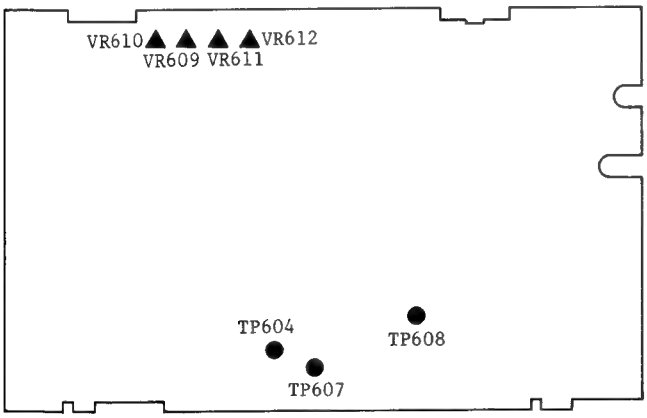

Deflection C.B.A.

(a) First, with the Iris Control Switch, set to the manual, and close the iris, then observe the signal at the horizontal rate at test point TP604.
(b) Trigger the oscilloscope with the test point TP608.
(c) Adjust the horizontal sawtooth control VR609 and the horizontal parabola control VR610 so that the signal waveform is flattest during the horizontal period as shown in Fig. 1.

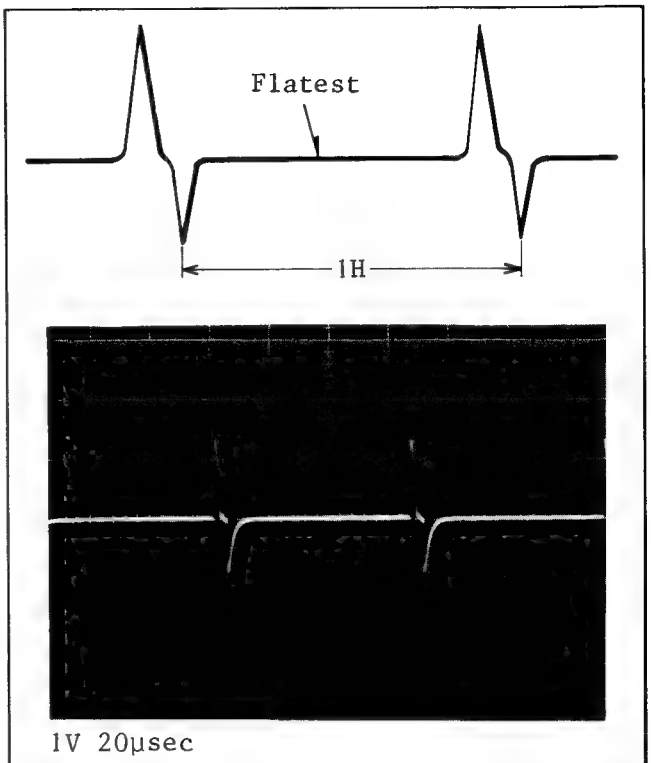

Fig.1

(d) Now, observe the signal at the vertical rate at test point TP604, and adjust vertical parabola control VR611 and the vertical sawtooth control VR612 so that the signal waveform is flatest during the vertical period as shown in Fig. 2.
Trigger the oscilloscope with test point TP607.

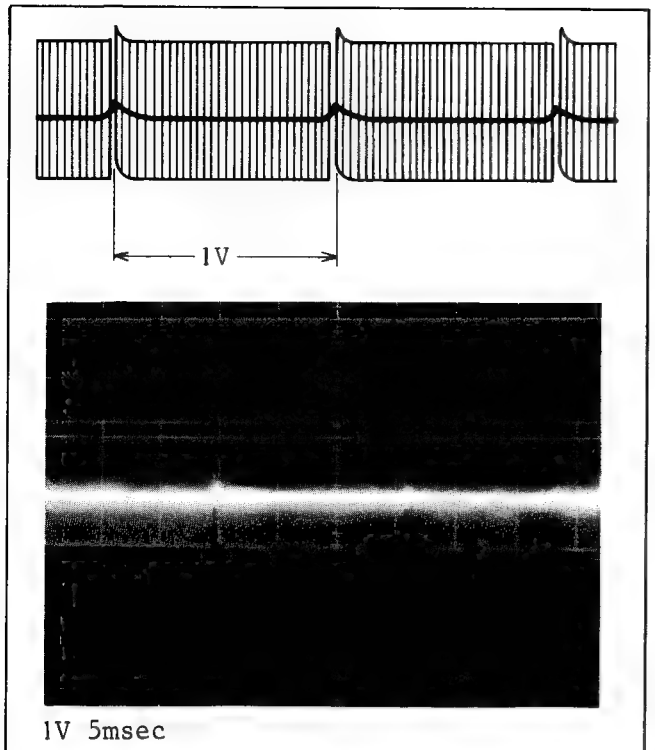

Fig.2

3. Release the color shading.

(a) Turn VR613, VR614, VR615, VR616, VR617, VR618, VR619 and VR620 to the center position as shown in Fig. 3.

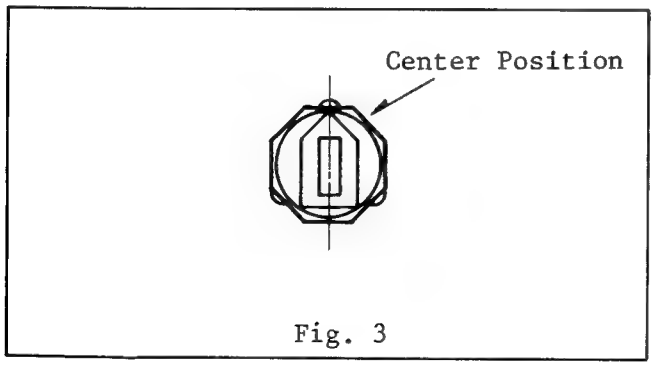

Fig. 3

(b) Turn VR306 fully counterclockwise.

4. Adjust the 3.58 MHz Sub-Carrier Frequency.

TP	Adj.	Chart	Test Instrument	Scope Trigger
TP307	C344	/	/	/

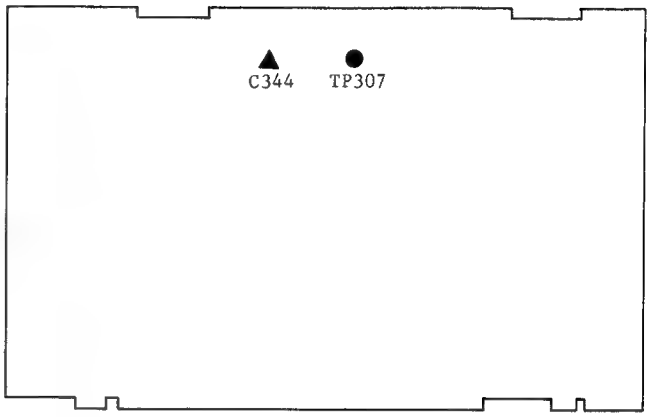

Process C.B.A.

(a) Measure the sub-carrier frequency at TP307.
(b) Adjust capacitor C344 so that the frequency counter indicates 3.579545 MHz ± 50 Hz.

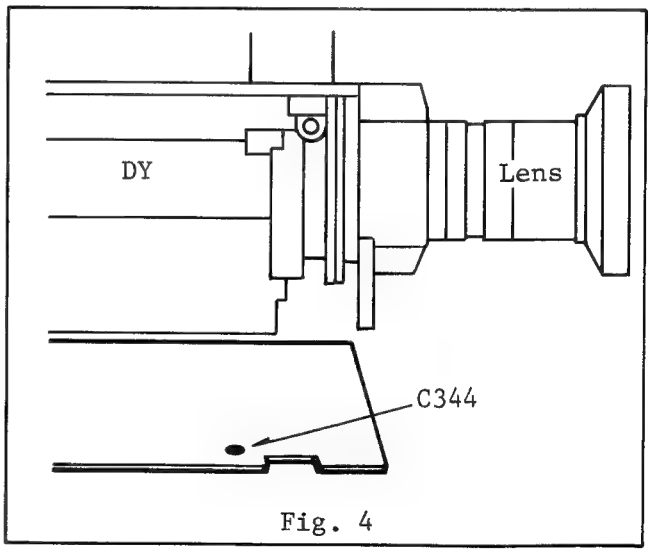

Fig. 4

(1) TARGET ADJUSTMENT

TP	Adj.	Chart	Test Instrument	Scope Trigger
TP601	VR601	/	Voltmeter	/

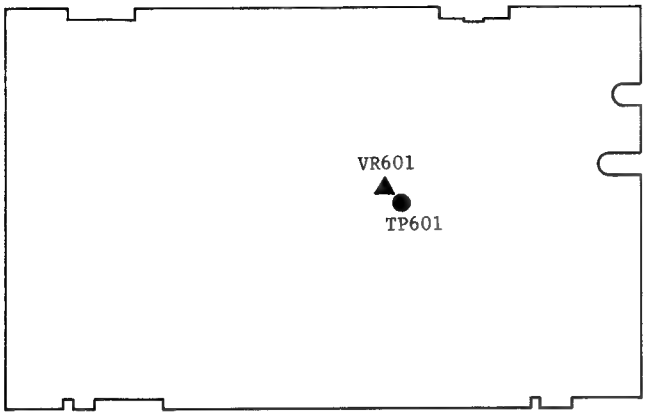

Deflection C.B.A.

Note: Before making any adjustments, you must wait 5 seconds after closing the lens to allow the dark current to stabilize.

1. Set the Iris Control switch to the manual, and close the iris.
2. Connect a 10:1 oscilloscope probe to test point TP601 on the deflection circuit board.
3. Wait 5 seconds after closing the lens to allow the dark current to stabilize.
4. Now adjust the target control VR601 for 55V DC .
5. Set iris control to auto.

(2) BEAM CURRENT ADJUSTMENT

Note: Set the iris control switch to auto.

TP	Adj.	Chart	Test Instrument	Scope Trigger
TP301 TP614 TP615	VR605 VR6200	White Light Box	Scope	TP608 HSS

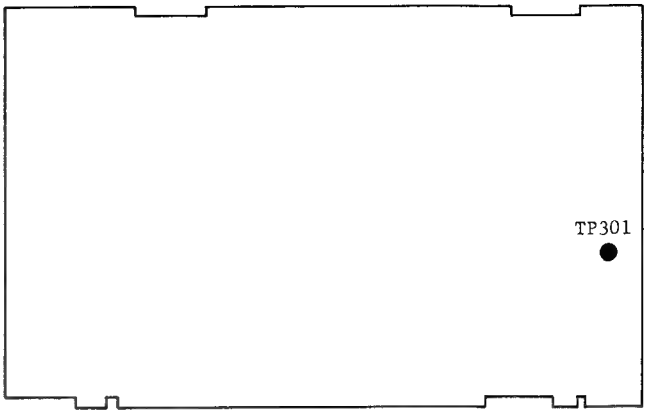

Process C.B.A.

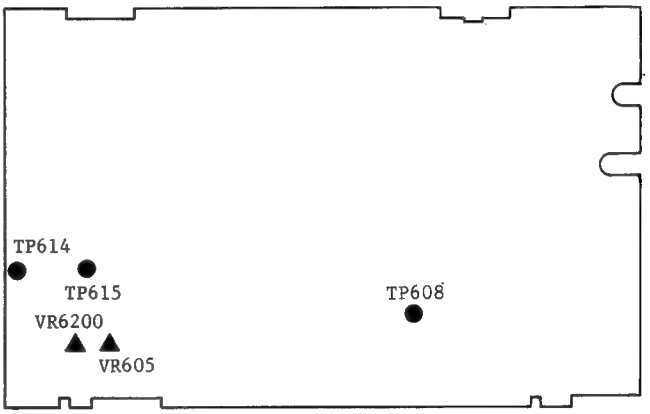

Deflection C.B.A.

1. Connect the oscilloscope to test point TP301 and observe the signal at the horizontal rate.
2. Connect the 560Ω resistor between TP614 and TP615, and stop the ABO circuit function. Trigger the scape using TP608.
3. Aim the camera at far left edge of a light box or other small light source in order to saturate the beam (waveform does not increase).

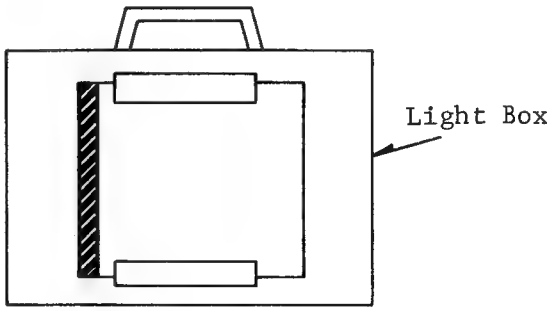

Fig. 5

Note: Use a low ambient room lighting when performing this procedure. If lighting is too high, then close the iris manually.

4. Adjust the beam control VR605, so that signal clipping occurs at 1.8 volts peak-to-peak (see Fig. 6).

Fig. 6-(A)

If the signal is less than 1.8 V peak-to-peak, use a more intense light source.
Be careful not to damage the pick-up tube with too strong light.

5. Disconnect the 560Ω resistor and adjust VR6200, so that signal clipping occurs at 2.5V peak-to-peak.

Fig. 6-(B)

(3) OPTICAL BLACK OFFSET ADJUSTMENT

TP	Adj.	Chart	Test Instrument	Scope Trigger
TP303	VR305	/	Scope	TP608 HSS

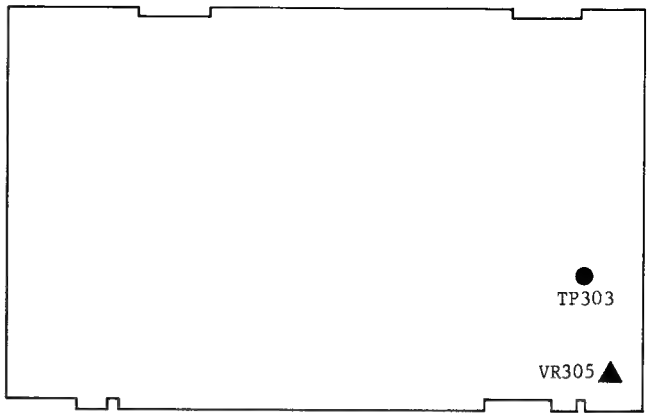

Process C.B.A.

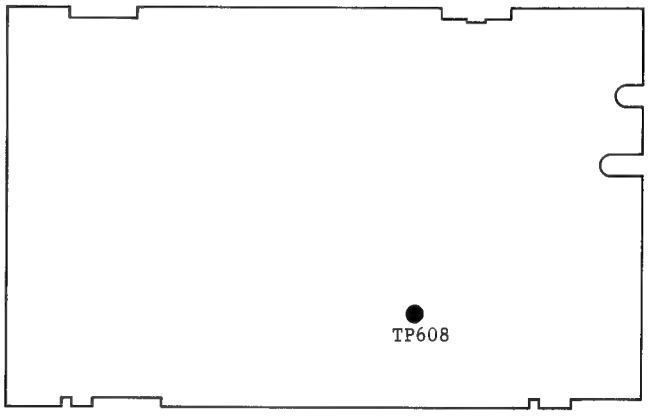

Deflection C.B.A.

Note: Before starting this adjustment, set the iris control switch to manual and close the iris, and wait 10 second.

1. Connect the oscilloscope to test point TP303 and observe the signal at the horizontal rate.
   Trigger the oscilloscope with test point TP608.
2. Adjust the optical black offset control VR305 so that the waveform level is about 20mVp-p.

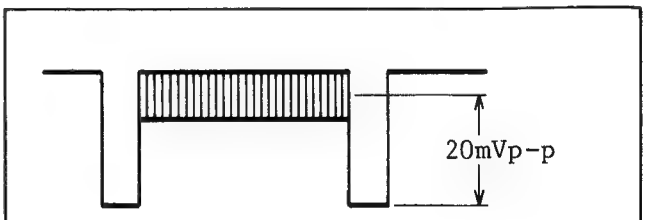

Fig. 7

3. Finally, set the iris control to auto.

(4) INPUT LEVEL, AUTO IRIS AND NTSC PEDESTAL ADJUSTMENT

TP	Adj.	Chart	Test Instrument	Scope Trigger
TP301 TP302 P306- Pin ①	VR301 VR302 VR308 VR318 VR604 VR606	Gray Scale	Scope	TP608 HSS

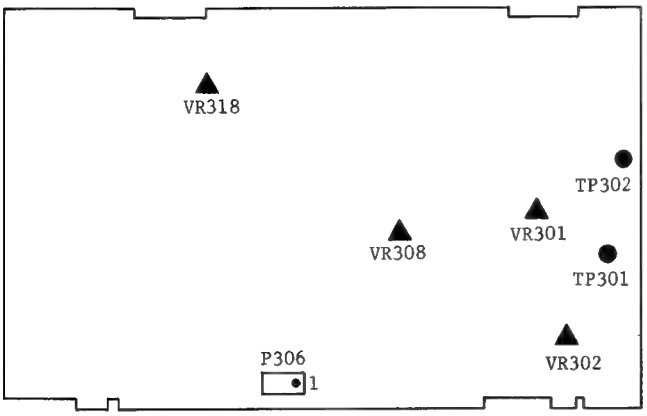

Process C.B.A.

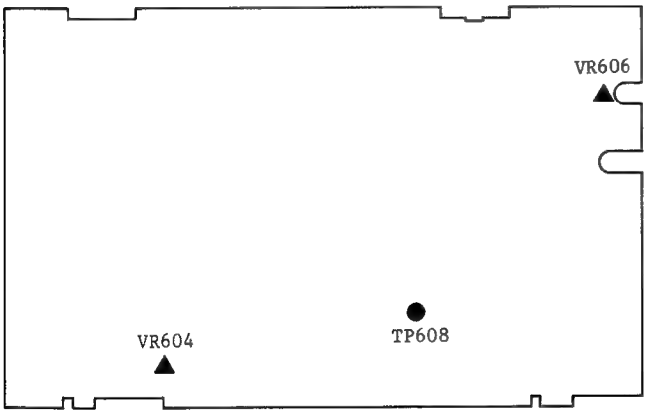

Deflection C.B.A.

Note: If a reflection type gray scale chart is used, a light intensity of between 1400 and 2000 lux will be required.

1. Aim the camera at the gray scale chart and set iris control to "Auto".
2. Connect the oscilloscope to test point TP301 and observe the signal at the horizontal rate. Trigger the oscilloscope with test point TP608.
3. Then to release the carrier signal, turn focus control VR604 fully clockwise.
4. Adjust VR606 to 600mVp-p.
5. Then adjust VR604 so that the carrier signal is maximized.

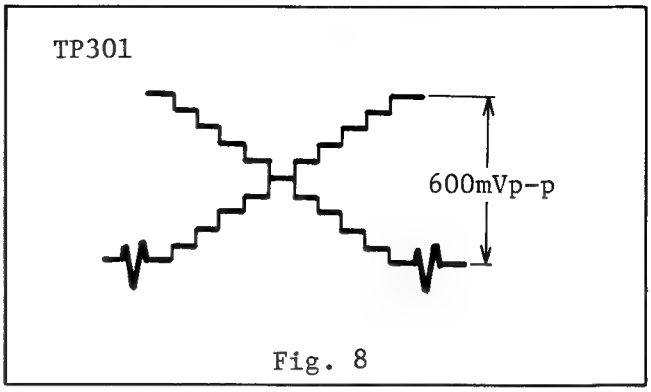

Fig. 8

6. Set iris control to manual and close the lens iris.
7. Connect the oscilloscope to the connector P306-pin (1) and observe the NTSC signal.
8. Adjust VR308 to 60mVp-p.

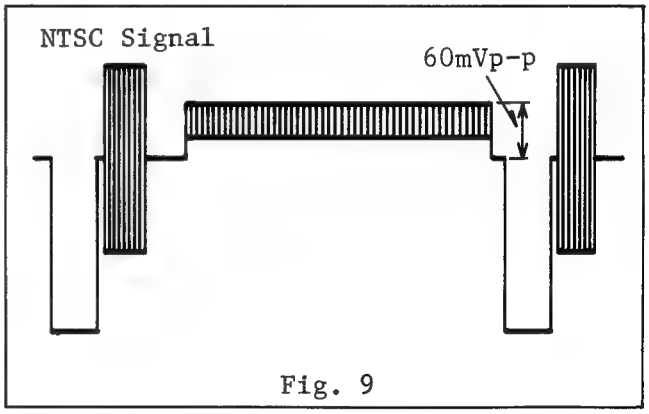

Fig. 9

9. Set iris control to auto and aim the camera at the gray scale chart.
10. Connect the oscilloscope to the connector P306-pin (1) and observe the NTSC signal.
11. Turn VR318 fully clockwise position, to reduce the carrier signal.
12. Adjust VR302 to 0.7 Vp-p.
13. Turn VR318 fully counterclockwise. Confirm signal at TP301 is 600mVp-p. If it is not then readjust.
14. Then connect the oscilloscope to test point TP302 and observe the signal at the horizontal rate.
15. Adjust VR301 to 600mVp-p.

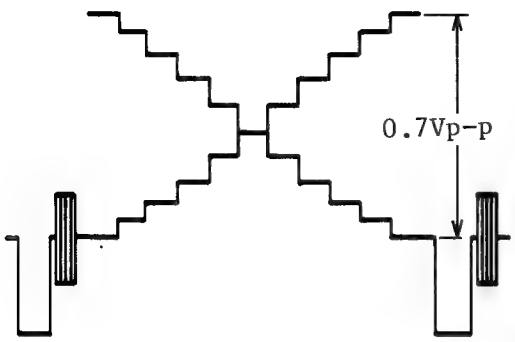

Fig. 10-(A)

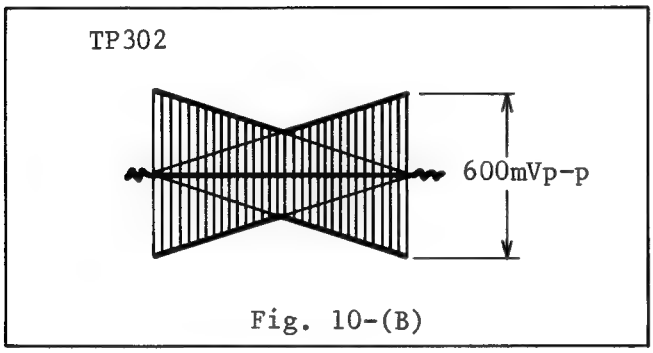

Fig. 10-(B)

(5) FOCUS VOLTAGE ADJUSTMENT (COARSE)

1. Aim the camera at an evenly illuminated white surface (use 1500 lux or Light Box) and focus the lens.
2. Adjust the focus control VR604, so that the magenta area in the monitor picture is maximized and the green area is minimized.

(6) BACK FOCUS ADJUSTMENT

1. Aim the camera at an object more than 10 meters (33 feet) away, and zoom all the way in (maximum close up).
2. Focus the lens on the object.
3. Loosen the hex screw using a 1.5 mm hex wrench on the relay lens.

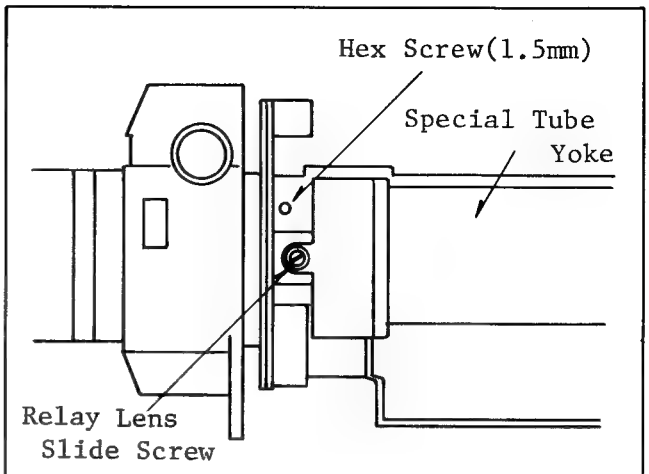

Fig. 11 Deflection Yoke View

4. Zoom all the way back and adjust the relay lens slide screw until the sharpest focus is obtained.
5. Repeat this procedure-zoom in, focus, zoom out, and adjust-until the best focus is obtained over the entire zoom range.
6. Tighten the hex screw using a 1.5 mm hex wrench on the relay lens. Do not overtighten the hex screw. You may crack the lens assembly or the lens housing.

(7) SPECIAL TUBE TURNING (ADJUSTMENT OF SPECIAL TUBE POSITION)

TP	Adj.	Chart	Test Instrument	Scope Trigger
TP302	VR604 Special Tube Turning	White	Scope	TP607 VSS

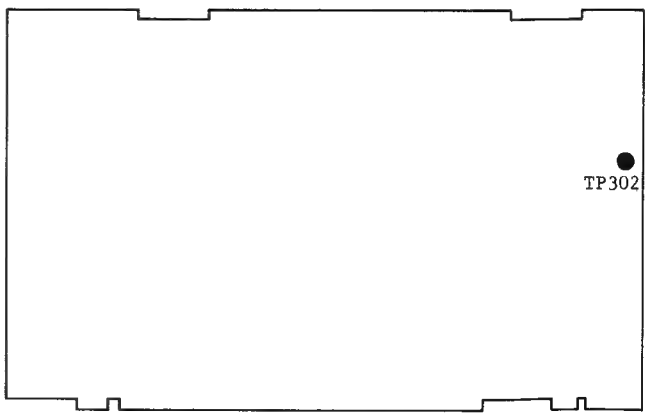

Process C.B.A.

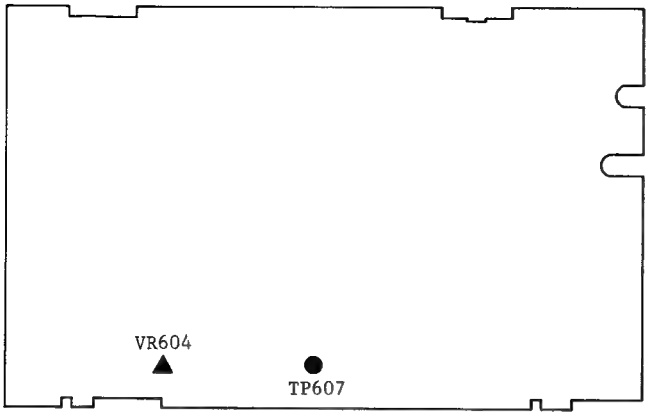

Deflection C.B.A.

1. Aim the camera at a white chart or white screen and focus the lens.
2. Connect the oscilloscope to test point TP302 and observe the signal at the vertical rate. Trigger the oscilloscope with test point TP607.
3. Adjust Focus Control VR604 to the maximum signal level as shown in Fig. 12.

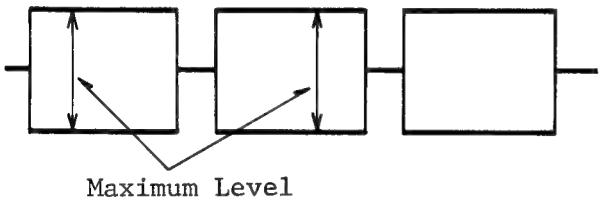

Fig. 12

4. Delay the sweep of the center portion of the vertical signal waveform and observe a few horizontal lines.
5. Loosen the special tube clamp screw on the deflection yoke assembly as shown in Fig. 13.

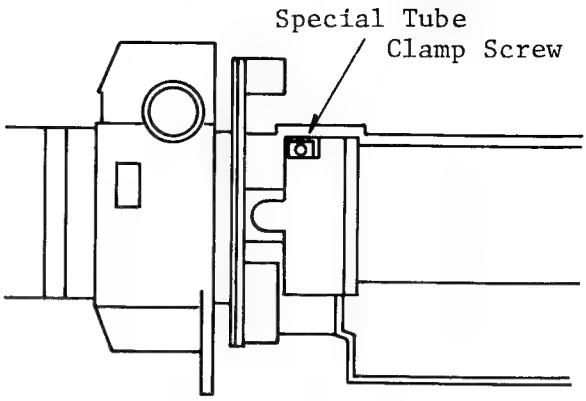

Fig. 13 Deflection Yoke View

6. Now, rotate the special tube socket from the back, using a 7mm hex wrench, so that the waveform for each horizontal scan line is free from beat and ripple.
   Do not worry about differences in amplitude.

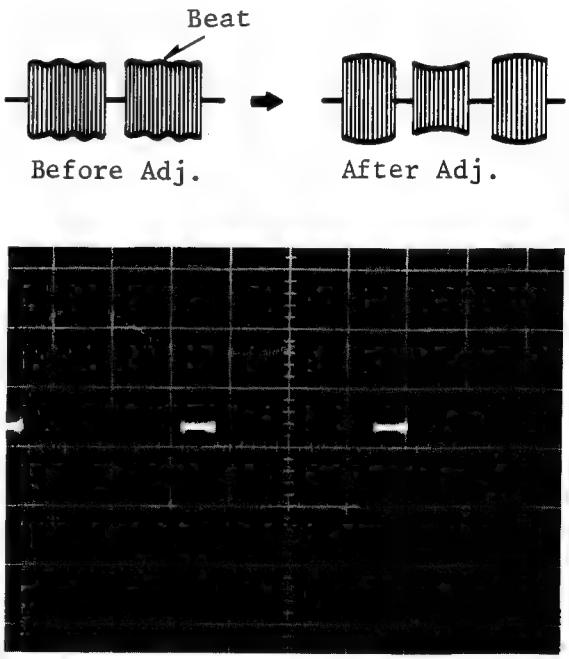

Fig. 14 Waveform of Proper Special Tube Turning

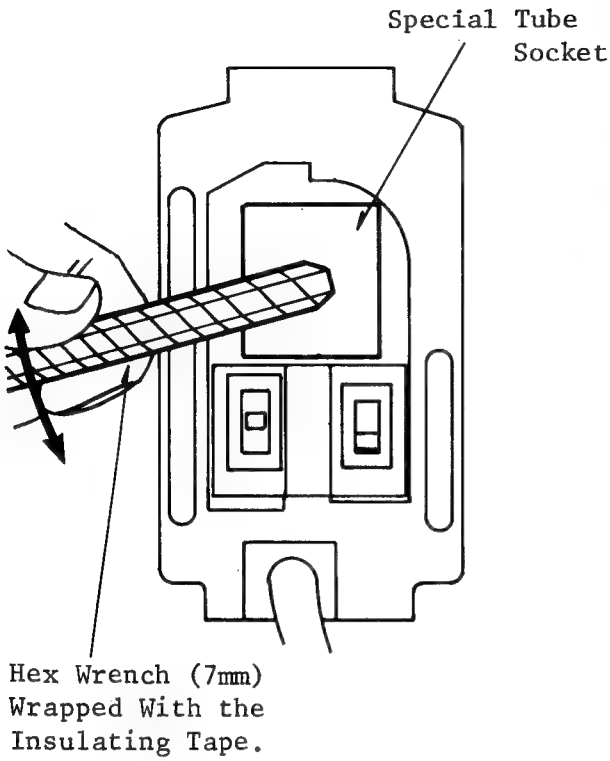

Fig. 15

Note: Be careful not to touch the connector on the special tube. The high voltage at the connector may give you a severe shock and perhaps damage the special tube.

7. Finally, tighten the special tube clamp screw.

(8) BEAM ALIGNMENT (COARSE)

TP	Adj.	Chart	Test Instrument	Scope Trigger
—	Two Alignment Rings	White	Color Monitor	—

1. Cut the lock paint on the alignment rings before attempting to rotate the rings.

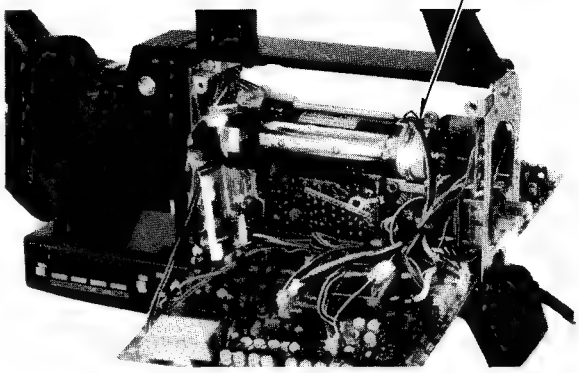

Fig. 16

2. Aim the camera at a white chart or white screen, and turn the color control knob clockwise (Red).
3. Observe the raster on the TV monitor and adjust the two alignment rings (see Fig. 16) so that the magenta color covers on whole screen as shown in Fig. 17.

Note: You may observe discoloration at the edges and corners. Disregard this as the Dynamic Focus adjustment procedure will clean this up.

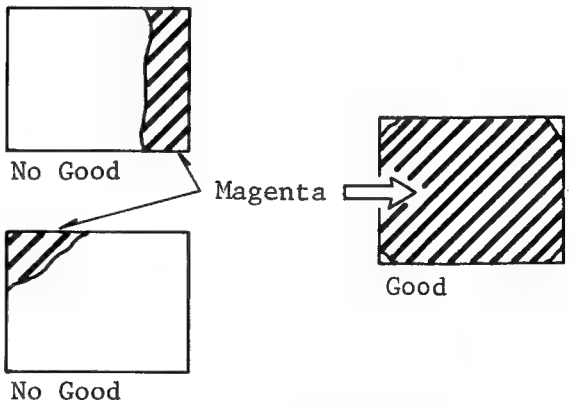

Fig. 17 TV Screen

4. Paint-lock the alignment rings with either white paint or lacquer.
5. Finally, turn the color control knob back to the center position.

(9) HORIZONTAL LINEARITY AND SIZE ADJUSTMENT

TP	Adj.	Chart	Test Instrument	Scope Trigger
TP302 4.3 MHz Carrier Composite Blanking	VR622 H. Size VR623 H. Lin (1) VR624 H. Lin (2)	White	Scope FM Detector	TP608 HSS

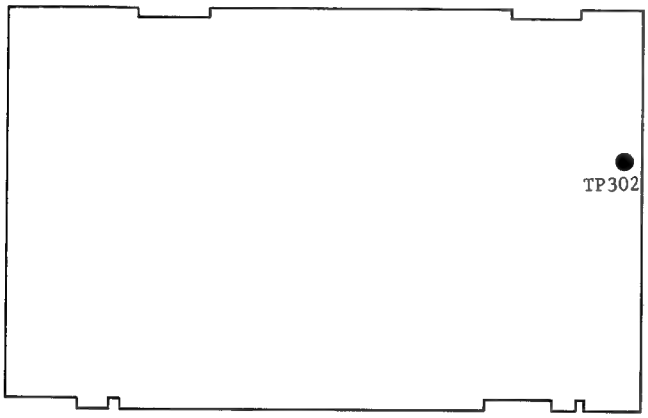

Process C.B.A.

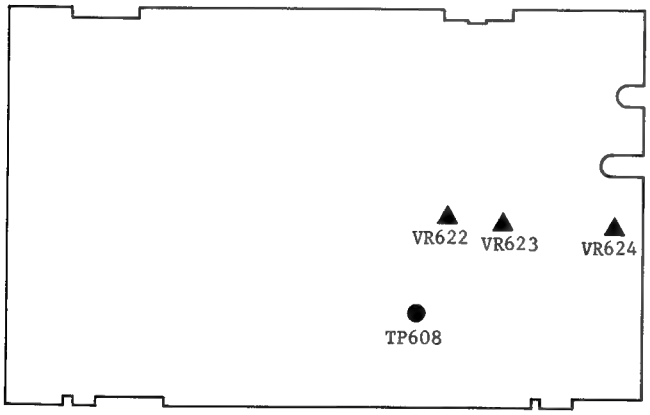

Deflection C.B.A.

1. Aim the camera at white chart or white screen.
2. Check the focus adjustment and, if necessary, readjust Focus Control VR604.
3. Turn the FM detector knob to the Horizontal Size and Linearity position.
4. Turn the switch on the rear panel to the 4.3 MHz position.

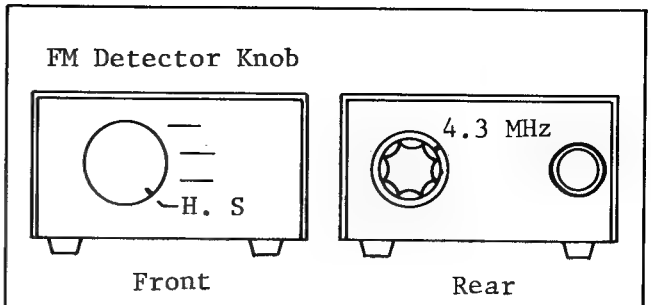

Fig. 18 FM Detector

5. Connect the FM detector input to test point TP302, connect the FM detector output to the oscilloscope input.
   Connect the FM detector blanking to test point TP308.
   Connect the FM detector +9V line to test point TP611.
   Connect the FM detector ground to the camera ground.

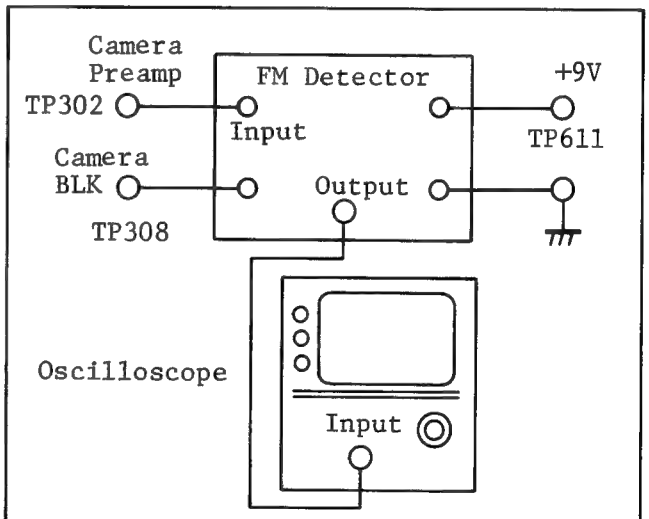

Fig. 19 Connection of FM Detector

6. Now, adjust the horizontal size control VR622, so that the signal is centered on the blanking line, as shown in Fig. 20. Trigger the oscilloscope with test point TP608.

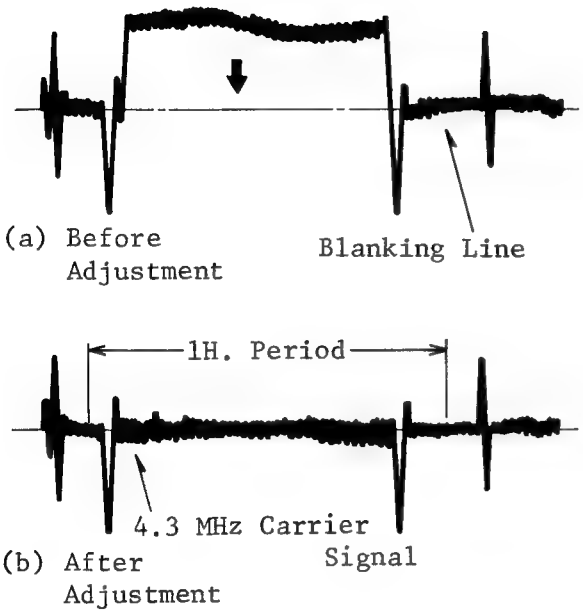

Fig. 20 Waveform of Proper Adjustment

7. Finally, adjust the horizontal linearity 1 control VR623, and the horizontal linearity 2 control, VR624, so that the waveform on the oscilloscope is as flat as possible. Horizontal Linearity 1 controls the horizontal sweep for the left side of the picture, while Horizontal Linearity 2 controls the overall linearity.

(10) VERTICAL CENTERING AND VERTICAL SIZE ADJUSTMENT

TP	Adj.	Chart	Test Instrument	Scope Trigger
TP302 4.3 MHz Carrier	VR602 V. Size VR603 V. Cent.	White	Scope	TP607 VSS

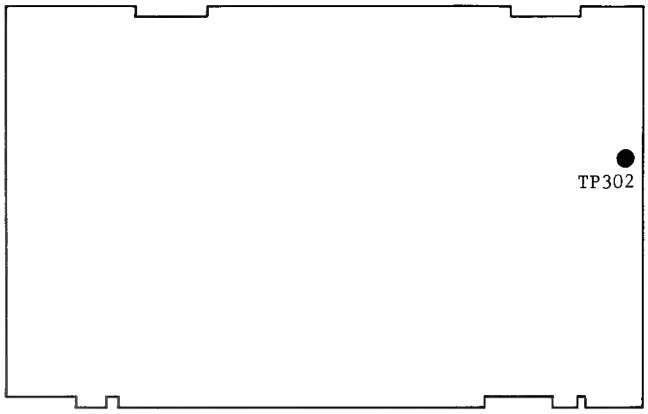

Process C.B.A.

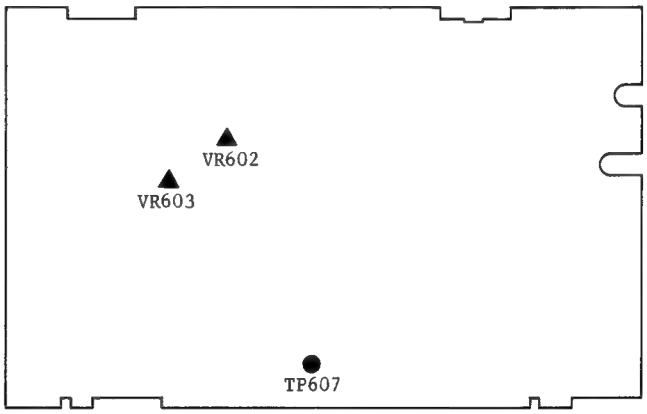

Deflection C.B.A.

1. Aim the camera at a white chart.
2. Connect the oscilloscope to test point TP302 and observe the vertical interval of the 4.3 MHz carrier signal.
   Trigger the oscilloscope with test point TP607.
3. Adjust the vertical size control, VR602, so that the beat in the signal is minimized. These beats will appear if the vertical size is not properly adjusted. Properly adjusted, there should be a maximum of one beat per envelope.

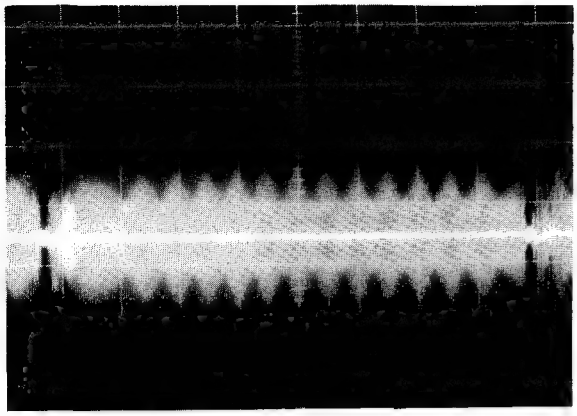

Before Adj.
0.2V 2msec

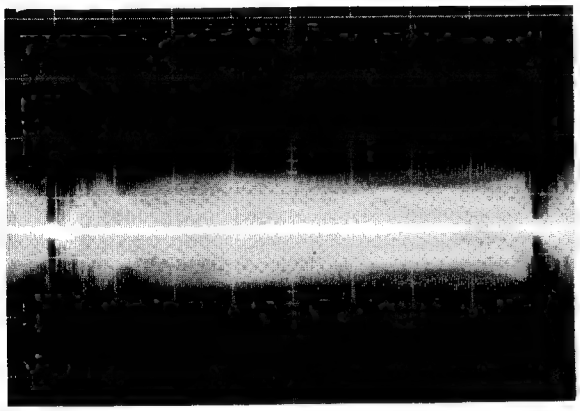

After Adj.
0.2V 2msec

Fig. 21 Waveform of V. Period at TP302

4. Now aim the camera at a small object so that the object is in the center of the monitor screen.
5. Adjust the vertical center control, VR603, so that the small object does not shift vertically as you zoom in and out.

(11) CONFIRMATION OF THE SPECIAL TUBE TURNING ADJUSTMENT

Check the special tube turning adjustment and adjust it if necessary. If the adjustment is correct, go on to the next procedure, step (12).

(12) HORIZONTAL CENTERING ADJUSTMENT

(Clamp Pulse Timing)

TP	Adj.	Chart	Test Instrument	Scope Trigger
TP301 Preamp Output TP317 CP1	VR621 H. Cent.	White	Scope	TP608 HSS

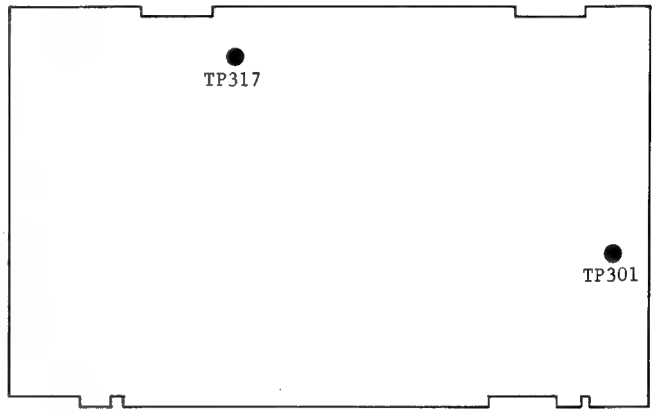

Process C.B.A.

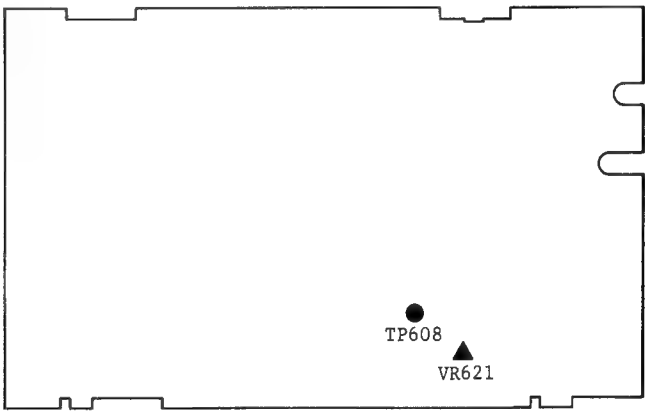

Deflection C.B.A.

1. Aim the camera at a white chart.
2. Next, connect an oscilloscope probe to test point TP301 and observe the horizontal blanking interval of the signal.
   Trigger the oscilloscope with test point TP608.
3. Connect the other oscilloscope probe to the clamp pulse 1 (CP1) test point, TP317.
4. Set the oscilloscope in the delay mode.

5. Adjust the horizontal centering control, VR621, so that the time between the trailing edge of the video signal, in other words, the front porch of the optical black, and the leading edge of the clamp pulse 1 signal (TP317) is 1.5 μsec. as shown in Fig. 22.

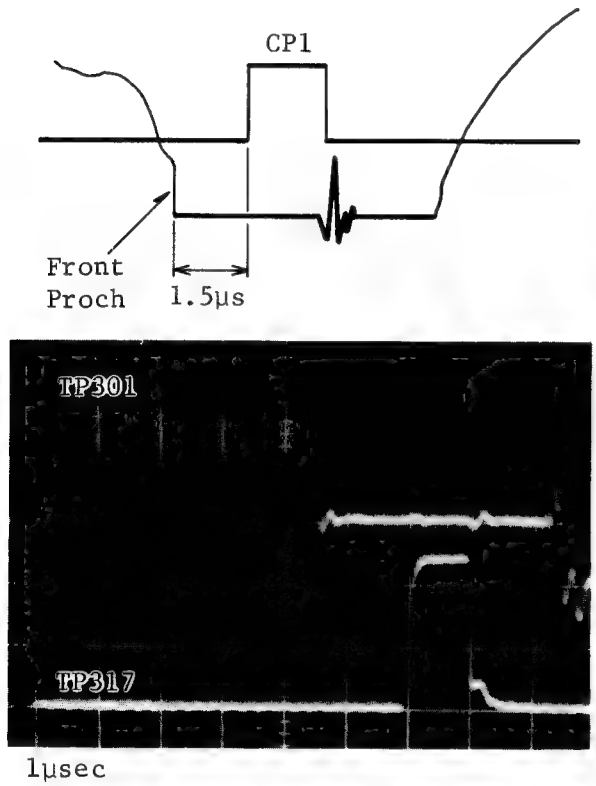

Fig. 22 Waveform for H. Cent.
(H. Blanking Signal at TP301 and CP1)

Note: With some special tubes, the oscilloscope display will show a double trace at the end of a horizontal line. If this should occur, reconfirm the special tube turning adjustment. If the special tube adjustment is correct, adjust the horizontal centering control VR621 so that the time between the trailing edge (a) of the video signal and the leading edge of the clamp pulse 1 signal is 1.5 μsec.

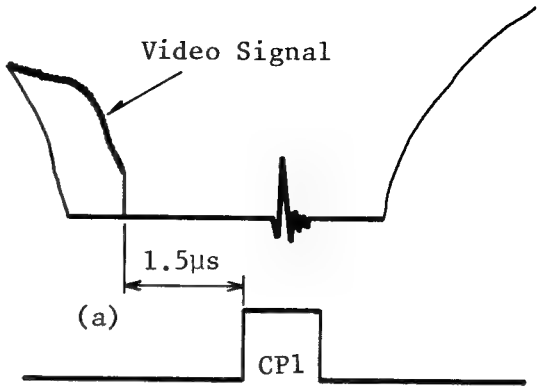

Fig. 23

(13) CONFIRM BEAM CURRENT ADJUSTMENT

If target adjustment is made, check and readjust the beam current (step 2) if necessary.
If the adjustment is correct, go on to the next procedure, step (14).

(14) DYNAMIC FOCUS ADJUSTMENT

TP	Adj.	Chart	Test Instrument	Scope Trigger
TP311 R-Y Signal	VR609 H. Saw. VR610 H. Para. VR611 V. Para. VR612 V. Saw.	White	Scope Color Monitor	TP608 HSS

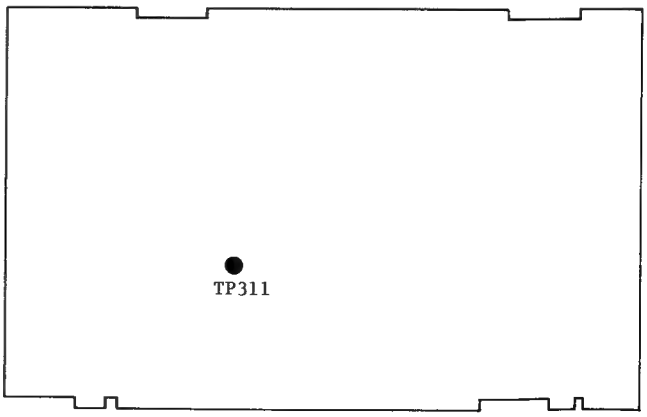

Process C.B.A.

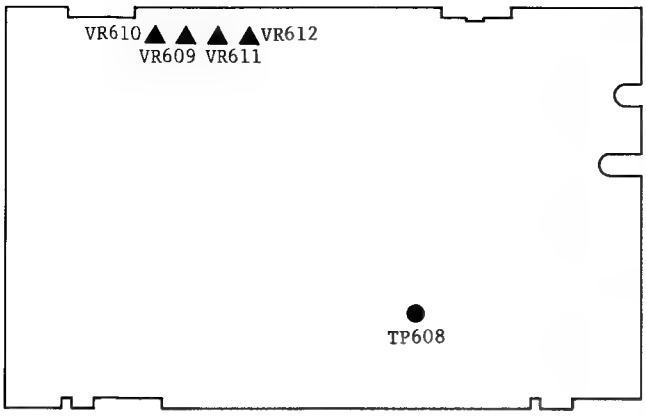

Deflection C.B.A.

1. Aim the camera at a white chart.
2. Observe the color monitor and adjust the focus control, VR604, so that the center area of monitor shows red (magenta) color (minimize green color), if necessary.
3. Connect the oscilloscope to test point TP311 and observe the R-Y signal at H. rate.
   Trigger the oscilloscope with test point TP608.
4. Alternately adjust vertical parabola control, VR611, and vertical sawtooth control, VR612 so that the signal level is minimized as shown in Fig. 24.

Before Adj.
100mV 10μsec
V. rate

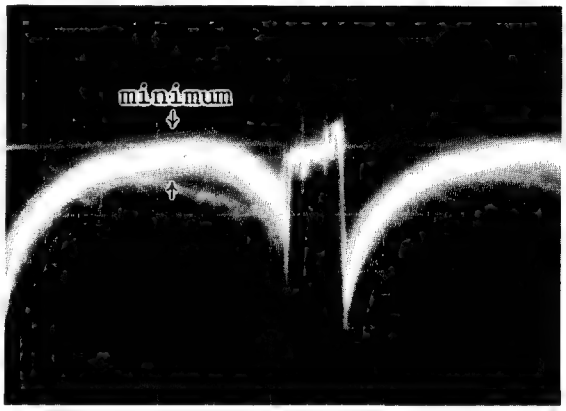

After Adj.
100mV 10μsec
V. rate

Fig. 24 Waveform of TP311

5. Then, alternately adjust horizontal sawtooth control, VR609, and horizontal parabola control, VR610 for the signal waveform to be flatest during horizontal period as shown in Fig. 25.

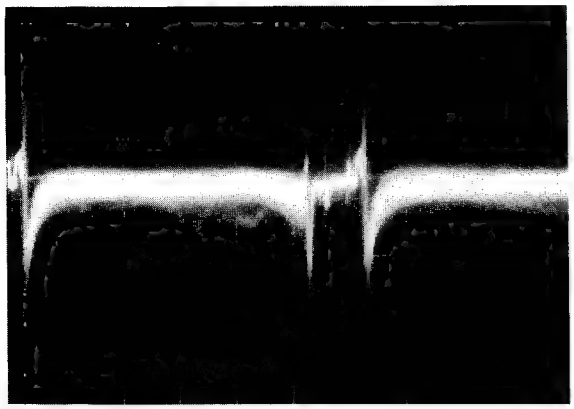

100mV 10μsec
H. rate

Fig. 25 Waveform of TP311

6. Check the color TV monitor for green tinting in the corners and at the sides. In most cases, the green tinting will be eliminated by these adjustments.
7. If, however, there is still some green tinting present, fine-adjust the alignment rings on the special tube until the green tinting is completely eliminated.
8. After fine-adjusting the alignment rings, it will be necessary to readjust the horizontal centering. Refer to step (12), the horizontal centering adjustment procedure.
9. Now, confirm that the horizontal linearity and size adjustments performed earlier have not shifted.
10. Also confirm that the vertical size adjustment has not shifted.

(15) COLOR SHADING ADJUSTMENT

TP	Adj.	Chart	Test Instrument	Scope Trigger
TP311 R-Y Signal	VR617,VR618 VR619,VR620	White	Scope Color Monitor	TP608 HSS
TP312 B-Y Signal	VR613,VR614 VR615,VR616			

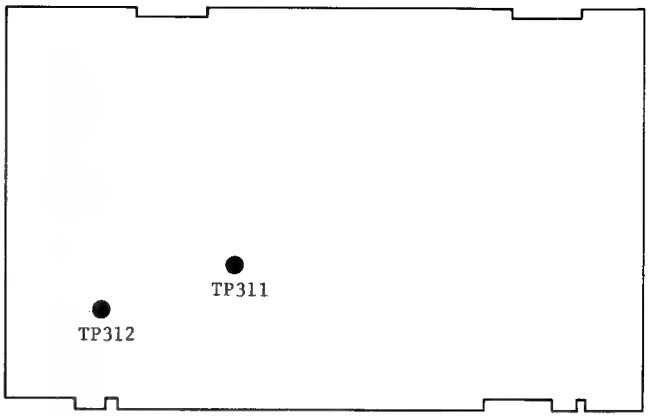

Process C.B.A.

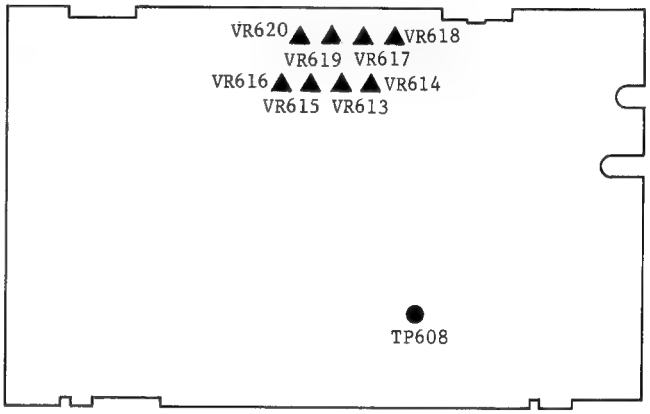

Deflection C.B.A.

1. Aim the camera at a white chart of a light box.
   If a reflection chart is used, a light intensity of about 4,000 lux will be required.
   Next, confirm that the color control knob set the center position.
2. Connect the oscilloscope to test point TP311 and observe the R-Y signal at the horizontal rate.
   Trigger the oscilloscope with test point TP608.
3. Alternately adjust VR619 and VR620 so that the signal level is minimized as shown in Fig. 26.

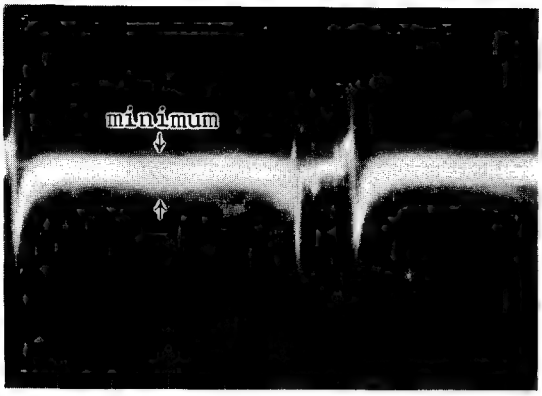

100mV 10μsec
V. rate

Fig. 26 Waveform of TP311

4. Then, alternately adjust VR617 and VR618 for the signal waveform to be flatest during horizontal period as shown in Fig. 27.

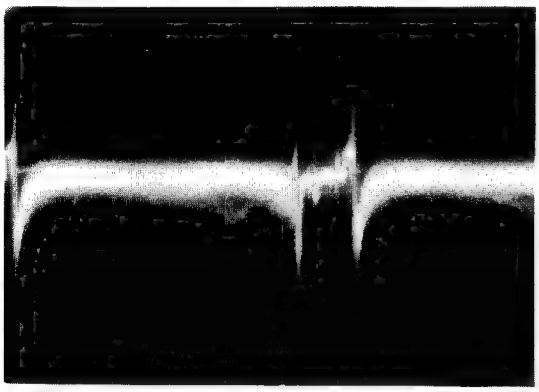

100mV 10μsec
H. rate

Fig. 27 Waveform of TP311

6. Now connect the oscilloscope to test point TP312 and observe the B-Y signal at the horizontal rate.
Trigger the oscilloscope with test point TP608.
7. Alternately adjust VR615 and VR616 so that the signal level is minimized as shown in Fig. 28.

100mV 10μsec
V. rate

Fig. 28 Waveform of TP312

8. Then, alternately adjust VR613 and VR614 for the signal waveform to be flatest during horizontal period as shown in Fig. 29.

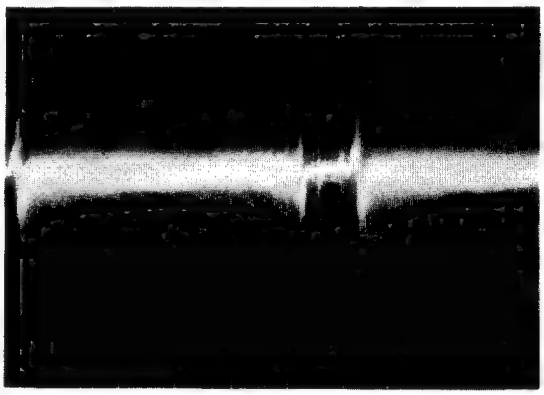

100mV 10μsec

Fig. 29 Waveform of TP312

[3] PROCESS CIRCUIT ADJUSTMENT

ADJUSTMENT FLOW CHART FOR PROCESS CIRCUIT

(1) Color Gamma Circuit Release
↓
(2) Vertical Edge Balance Adjustment
↓
(3) Carrier Balance Adjustment
↓
(4) Red/Blue Signal Separation Adjustment
↓
(5) R and B Gain, Gamma Reference Voltage Adjustment
↓
(6) R and B Gamma Adjustment
↓
(7) White Balance Fine Adjustment
↓
(8) AWC (Automatic White Balance Control) Adjustment
↓
(9) High Luminance Chroma Clip Adjustment
↓
(10) Confirmation of The NTSC Pedestal Adjustment
↓
(11) Vertical Edge Gain Adjustment
↓
(12) Color Signal Adjustment
↓
(13) Confirmation of Resolution

Preparation:

The process circuit requires several preadjustments before any actual adjustments can be made.

1. Set the color control knob to the center, or detent position.
2. Next, set the iris control switch to the auto position.
3. Set the color temperature correction switch to the indoor position (mark: lamp).
4. Set the negative / positive reverse switch to the positive side.
5. Finally, set the standby switch to the operate position.

A test pattern light box will be required for several of the adjustment procedures. Be sure that the AC voltage (115∿125V) for the light box is correct and that you are using the correct pattern for each procedure.
If the reflection chart is used, the following light condition is required.

Color Temperature: 3200°K
Light Intensity: 1400 ∿ 2000 lux (on the chart surface)
Make sure that the correct pattern is used for each step.

(1) COLOR GAMMA CIRCUIT RELEASE

Turn VR307 fully counterclockwise and turn VR310, 311, 312, 313, 314, 315, 316 and VR317 to the center position as shown in Fig. 30.

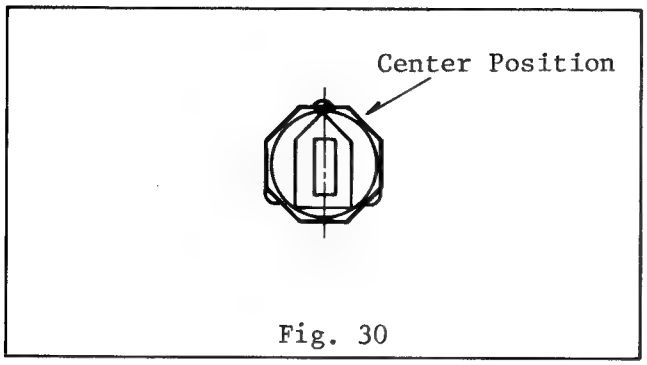

Fig. 30

Note: Adjust each potentiometer from the component side of circuit board.

(2) VERTICAL EDGE BALANCE ADJUSTMENT

TP	Adj.	Chart	Test Instrument	Scope Trigger
TP309 YL Signal TP310 V-Edge Correction Signal	VR325 Bias Control VR326 V-Edge Gain VR327 V-Edge Bal.	Gray Scale	Scope	TP608 HSS TP607 VSS

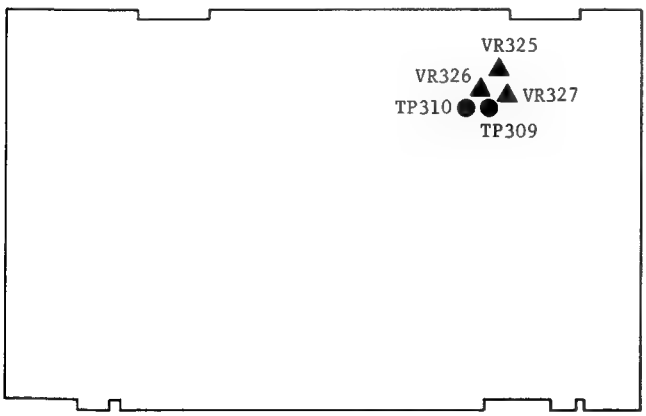

Process C.B.A.

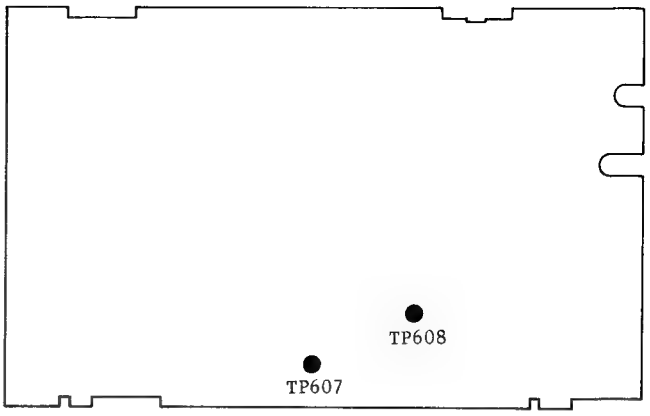

Deflection C.B.A.

1. Aim the camera at the gray scale chart.
2. Connect the oscilloscope to test point TP309 and observe the signal at H rate.
   Trigger the oscilloscope with test point TP608.
3. Adjust the bias control, VR325, so that the YL signal is maximized.
4. Then, connect the oscilloscope to test point TP310 and observe the vertical edge correction signal at V. rate.
   Trigger the oscilloscope with test point TP607.
5. Adjust the vertical edge balance control VR327 so that the vertical edge correction signal is minimized, as shown in Fig. 31.
6. Finally, turn the vertical edge gain control, VR326, fully clockwise the component side of the circuit board.

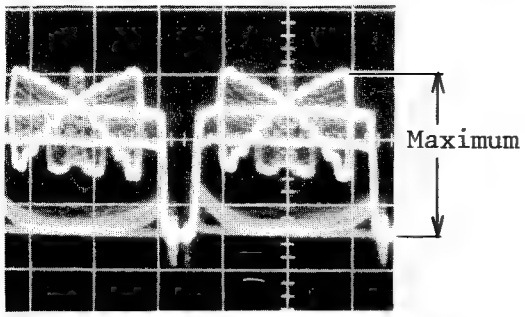

Fig. 31-(A)

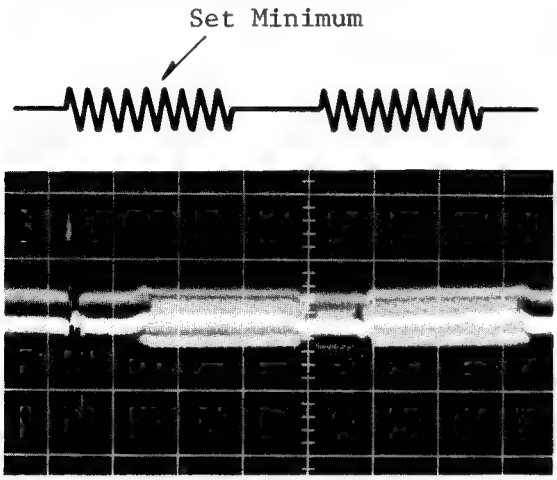

No Good 20mV 2msec

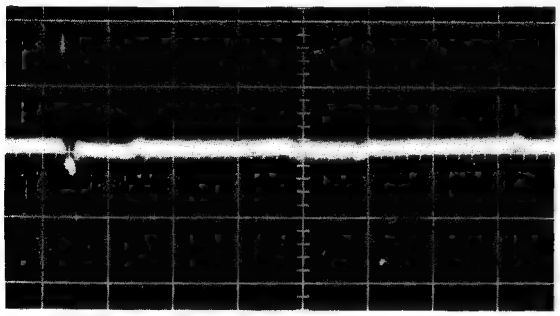

Good 20mV 2msec

Fig. 31-(B) Vertical Edge Correction Signal at TP310

(3) CARRIER BALANCE ADJUSTMENT

TP	Adj.	Chart	Test Instrument	Scope Trigger
P306-Pin ① NTSC Signal	VR323 VR324	/	Scope	TP608 HSS

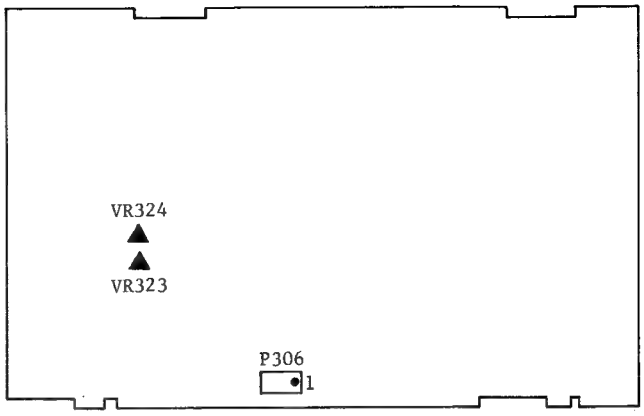

Process C.B.A.

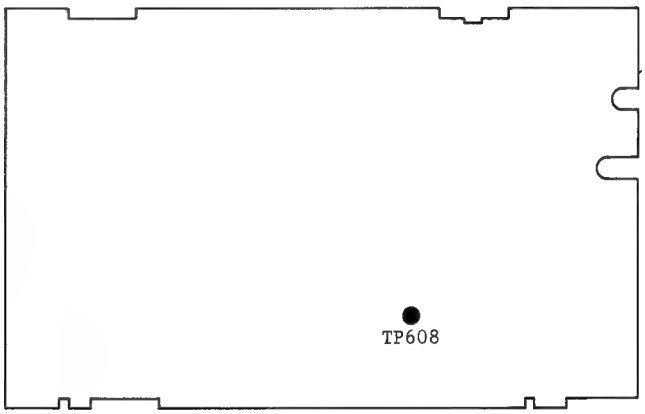

Deflection C.B.A.

1. Set the iris control switch to manual and close the iris.
2. Connect the oscilloscope to the connector, P306-pin (1) and observe the NTSC signal at H. rate. Trigger the oscilloscope with test point TP608.
3. Alternately adjust the carrier balance control, VR323 and VR324 until the carrier leakage is minimized.
4. Set iris control to "Auto".

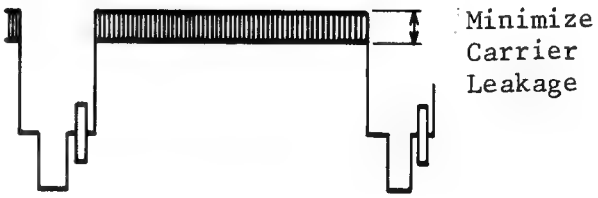

Fig. 32 NTSC Signal

(4) RED/BLUE SIGNAL SEPARATION ADJUSTMENT

TP	Adj.	Chart	Test Instrument	Scope Trigger
TP304 Blue Signal	VR309 VR330	Gray Scale	Scope	TP608 HSS

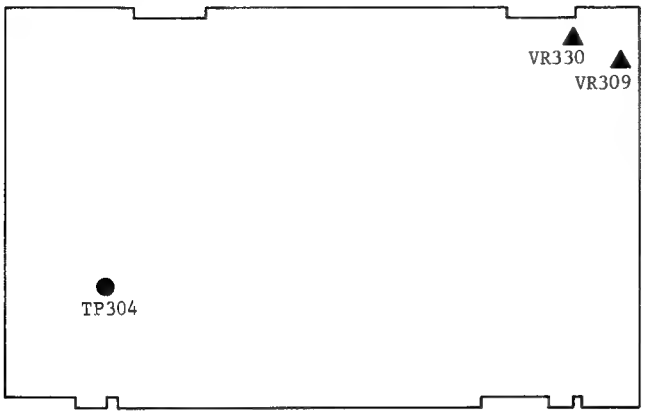

Process C.B.A.

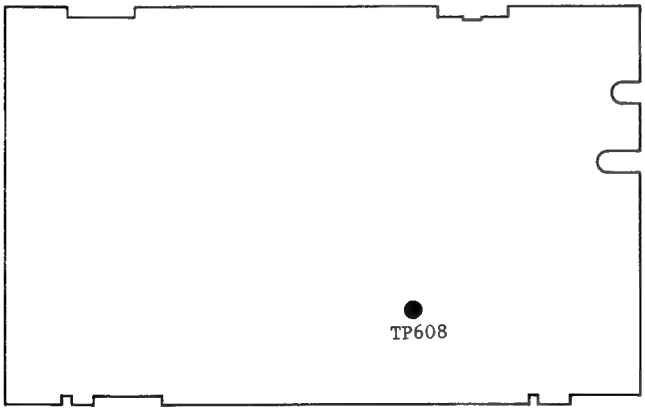

Deflection C.B.A.

1. Set iris control to "Auto".
2. Aim the camera at the gray scale chart.
3. Connect the oscilloscope to test point TP304 and observe the blue signal.
4. Alternately adjust the two red & blue separation controls, VR309 and VR330 to minimize the flicker.

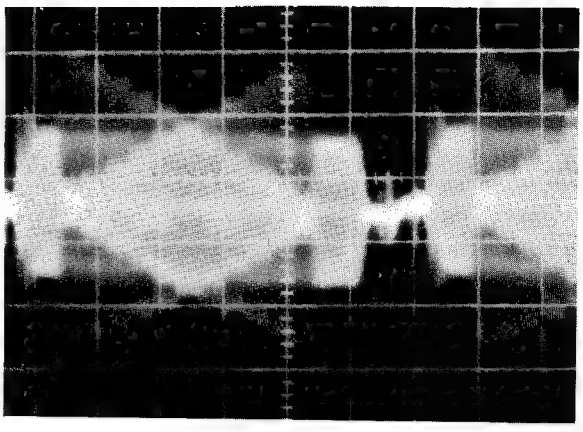

Fig. 33 Blue Signal

If the blue signal from test point TP304 has the red contamination, the waveform will be unstable and have changing amplitude.

(5) R AND B GAIN, GAMMA REFERENCE VOLTAGE ADJUSTMENT

TP	Adj.	Chart	Test Instrument	Scope Trigger
Connector P306- Pin ① NTSC Signal TP306	VR307 VR313 VR317	Gray Scale	Scope	TP608 HSS

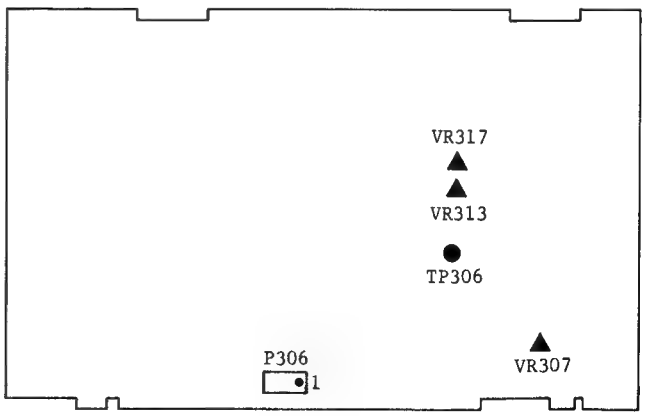

Process C.B.A.

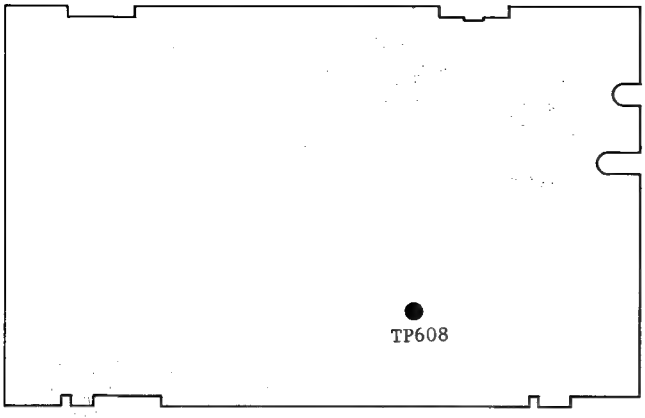

Deflection C.B.A.

Note: Before proceeding with this adjustment , preset the following camera controls.

a. Set the color control knob to the center, or detent position.
b. Set the iris control switch to the auto position.
c. Set the color temperature correction switch to the indoor position (lamp side).
d. Turn the power off and wait 5 seconds, to release the automatic white balance control (AWB). Then, turn the power on and confirm the AWB indicator (on EVF) glows red.

1. Aim the camera at the gray scale chart.
2. Connect the oscilloscope to the test point TP306 and observe the signal at H. rate.
   Trigger the oscilloscope with test point TP608.
3. Adjust the gamma reference voltage control, VR307, so that the signal is clipped at the six step from the bottom as shown in Fig. 34.

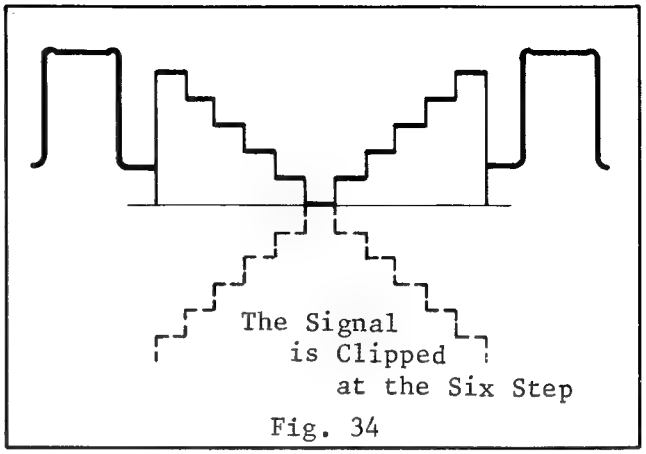

Fig. 34

4. Then, connect the oscilloscope to the connector P306-pin (1) and observe the NTSC signal at H. rate.
   Trigger the oscilloscope with test point TP608.
5. Alternately adjust the red gain control VR313, and the blue gain control VR317, to minimize the carrier leakage at the fourth step through the eighth step from the bottom.

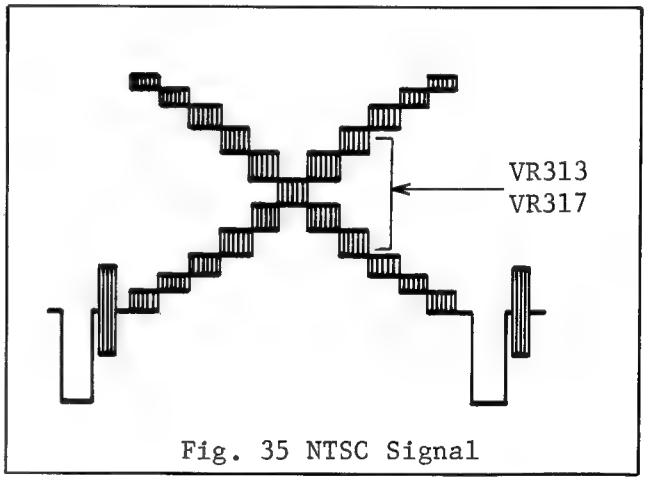

Fig. 35 NTSC Signal

(6) R AND B GAMMA ADJUSTMENT

TP	Adj.	Chart	Test Instrument	Scope Trigger
Connector P306-Pin ① NTSC Signal	VR312 R Gamma 1 VR316 B Gamma 1 VR311 R Gamma 2 VR315 B Gamma 2 VR310 R Gamma 3 VR314 B Gamma 3	Gray Scale	Scope	TP608 HSS

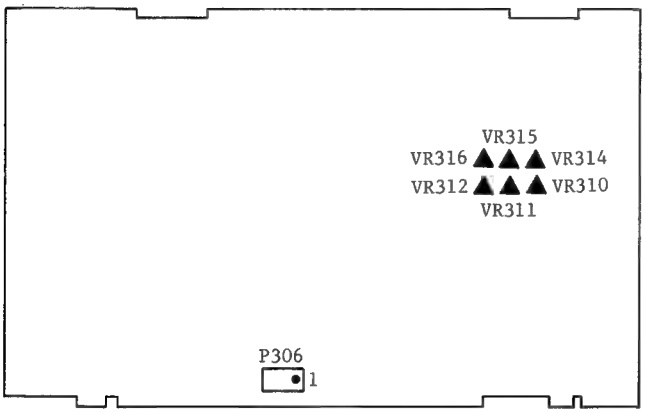

Process C.B.A.

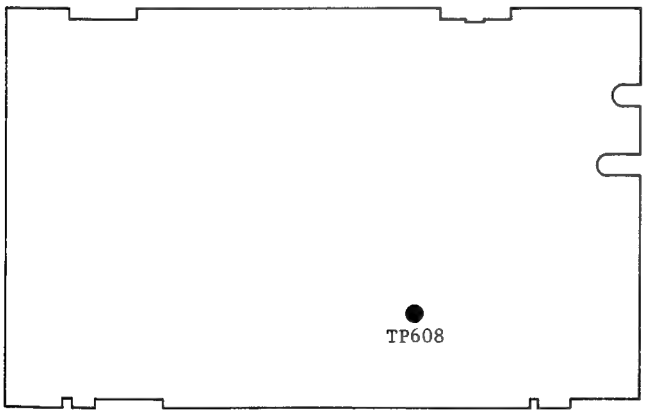

Deflection C.B.A.

1. Aim the camera at the gray scale chart.
2. Connect the oscilloscope to the connector P306-pin (1) and observe the NTSC signal at H. rate. Trigger the oscilloscope with test point TP608.
3. Adjust Red Gamma 1 Control, VR312 and Blue Gamma 1 Control, VR316, until the carrier leakage from the bottom through third steps is minimized.
4. Alternately adjust the red gain control VR313, and the blue gain control VR317, to minimize the carrier leakage at the fourth step through the eighth step from the bottom.
5. Adjust Red Gamma 2 Control VR311 and Blue Gamma 2 Control VR315 until the carrier leakage from third through fifth step from the top is minimized.
6. Zoom the lens out so that the black edge of the chart is visible in the picture. This increases the chart luminance which makes adjustment easier.
7. Then, adjust Red Gamma 3 Control VR310 and Blue Gamma 3 Control VR314, until the carrier leakage from the first through third step from the top is minimized.

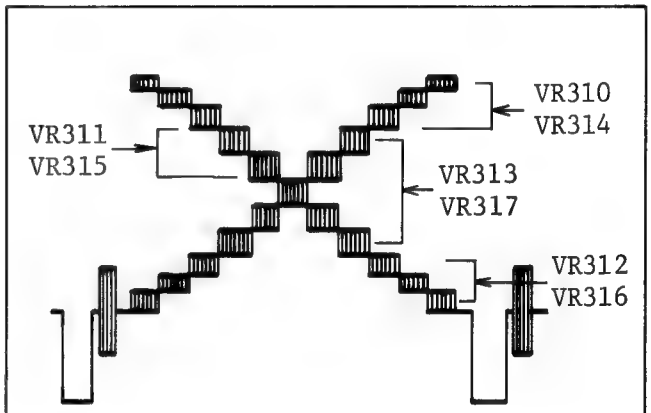

Fig. 36 NTSC Waveform

It is normal to have some residual carrier leakage, particularly at the top steps of the waveform. How much is normal depends on the characteristic of the special tube.

(7) WHITE BALANCE FINE ADJUSTMENT

Repeat (5) R and B gain adjustment and (6) R and B gamma adjustment.

(8) AWB (AUTOMATIC WHITE BALANCE CONTROL) ADJUSTMENT

TP	Adj.	Chart	Test Instrument	Scope Trigger
TP313 B-Y Comparator Signal	VR329	Gray Scale	Scope	TP607 VSS
TP314 R-Y Comparator Signal	VR328			

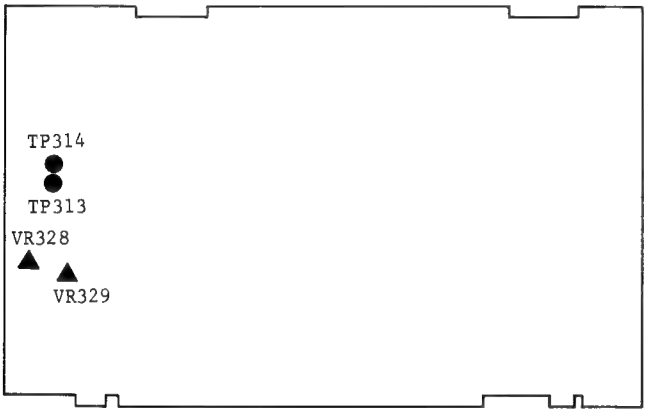

Process C.B.A.

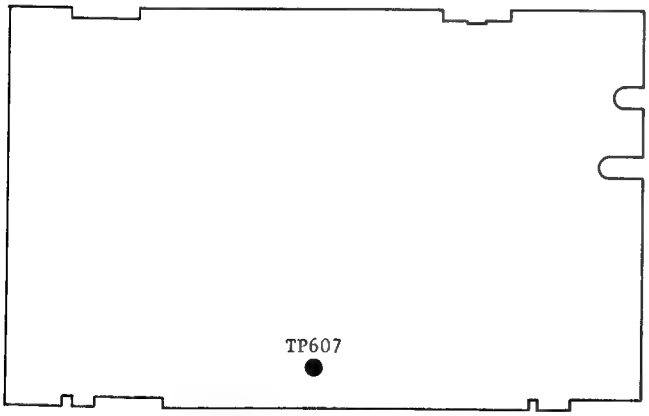

Deflection C.B.A.

1. Turn the power off and wait 5 seconds for the automatic white balance control (AWB) to be released, then turn the power back on.
2. Confirm that the automatic white balance control indicator glows red.
3. Aim the camera at the gray scale chart.
4. See if the color balance is correct by checking for color in the picture. The color balance is correct if there is no color in the picture.
5. Now connect the oscilloscope to test point TP313 and observe the waveform at the vertical rate. Trigger the oscilloscope with test point TP607.
6. Place the oscilloscope in the DC mode.
7. Adjust Automatic White Balance Control VR329 so that the signal looks like as shown below.

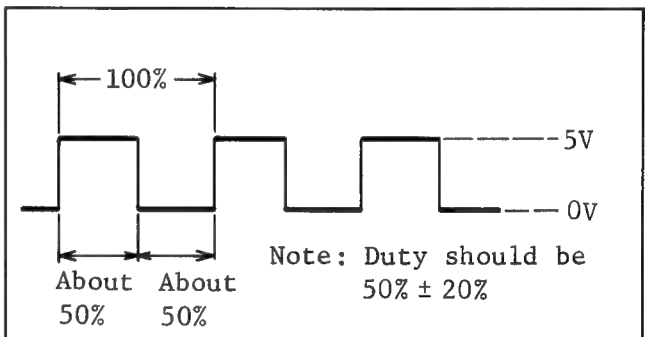

Fig. 37

8. Connect the oscilloscope to test point TP314 and observe the waveform at the vertical rate.
9. Adjust Automatic White Balance Control VR328 in the same manner.
10. Aim the camera at the white chart and confirm that the white balance is correct when the automatic white balance control switch is pushed ON.

(9) HIGH LUMINANCE CHROMA CLIP ADJUSTMENT

TP	Adj.	Chart	Test Instrument	Scope Trigger
/	VR318 H.C. Gain	Gray Scale	Monitor	/

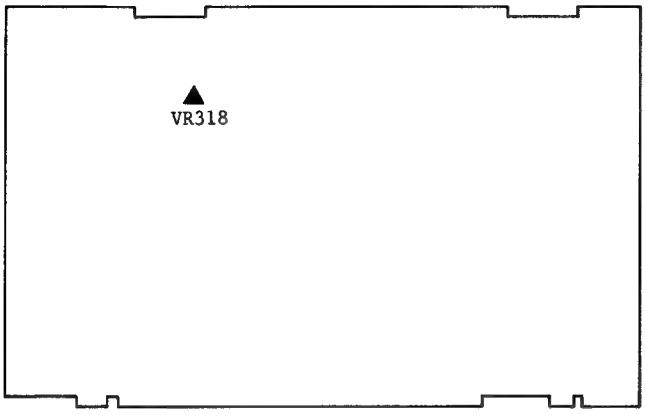

Process C.B.A.

1. Aim the camera at the gray scale chart and observe the picture on the TV monitor.
2. Next, zoom out to 12 mm and check the high luminance part of the scale, from the whitest step to the fourth step from the white. The picture should be whitish-gray.
3. If however, the picture has a green or yellow cast, adjust the High Luminance Chroma Clip Gain Control VR318, until the cast is eliminated and the picture a normal whitish-gray.

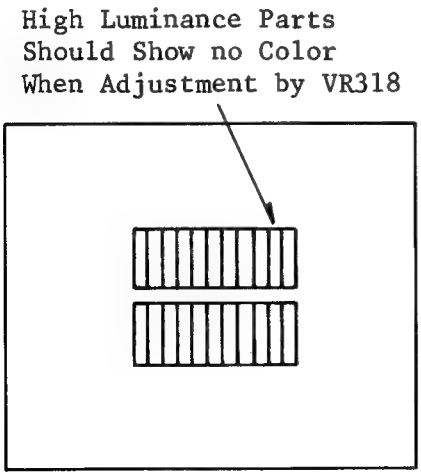

Fig. 38

(10) CONFIRMATION OF THE NTSC PEDESTAL ADJUSTMENT

Check NTSC pedestal adjustment and NTSC signal level adjustment, step (4) (see deflection circuit adjustment flow chart), and adjust it if necessary.

If the adjustment is correct, go on to the next step.

(11) VERTICAL EDGE GAIN ADJUSTMENT

TP	Adj.	Chart	Test Instrument	Scope Trigger
/	VR326 V. Edge Gain	Gray Scale	Monitor	/

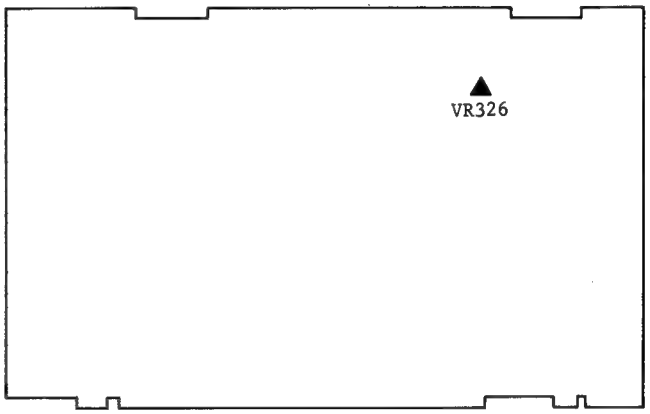

Process C.B.A.

1. Aim the camera at the gray scale chart.
2. Observe the picture on the monitor and adjust Vertical Edge Gain Control VR326 until the color fringing on the upper and lower edges of the gray scale is eliminated.

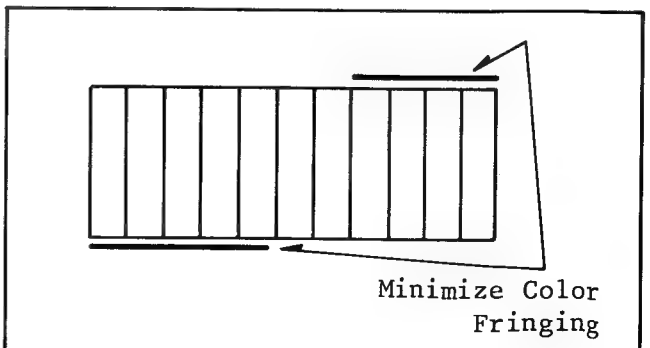

Fig. 39 Picture of Gray-Scale

(12) COLOR SIGNAL ADJUSTMENT

TP	Adj.	Chart	Test Instrument	Scope Trigger
Connector P306-Pin ① NTSC Signal	VR320 Color Gain VR319 R-Y Gain VR321 BF Phase C361 B-Y Phase VR322 Negative BF Phase	Color Bar Chart	Vectorscope	/

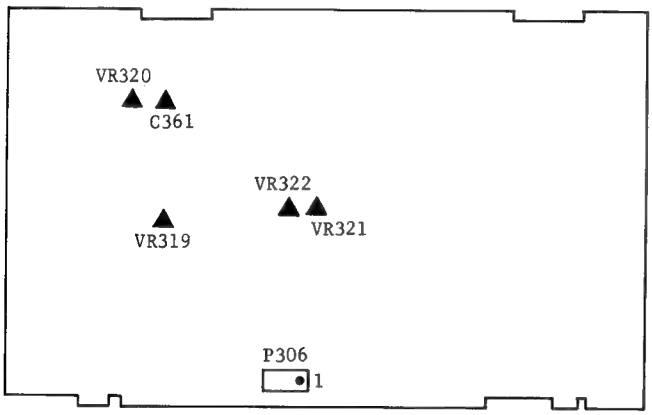

Process C.B.A.

Note: Before beginning this adjustment, check to see that the automatic white balance control indicator in the camera's electronic view-finder glows red. If doesn't, turn the power off for 5 seconds to release the automatic white balance control circuit, then turn it back on and proceed with the color signal adjustment procedure.

1. Aim the camera at the color bar chart.
2. Connect the vectorscope to the connector P306-pin (1).
3. Set the vectorscope to "Vector" mode and observe the color vector.
4. Adjust the color gain control VR320, so that the amplitude of the YL signal is 1.2 times the amplitude of the burst signal.
5. Adjust the R-Y gain control VR319, so that the amplitude of the red signal is 1.5 times the amplitude of the burst signal.
6. Adjust the burst flag phase control VR321, (BF Phase), so that the vector phase of the red signal is 104° ± 15°.
7. Adjust the B-Y phase control C361 so that the YL signal is 168° +10° -30°
8. Adjust the total amplitude and the total phase with VR320, VR319, VR321 and C361 to be within specification as shown in chart-1.
9. Turn the negative/positive reverse switch to the negative side, and adjust the negative BF phase control VR322, so that the vector phase of the red signal is 290°.

Specification:

1) Phase

Signal	Vector Phase	Adj.
R	104° ± 15°	VR321
YL	168° +10° -30°	C361
R (Negative)	290°	VR322

2) Amplitude

a. The amplitude of R signal is 1.5 times the burst signal.
b. The amplitude of YL signal is 1.2 times the burst signal.

Chart-1.

(13) CONFIRMATION OF RESOLUTION

1. Shoot the Resolution Chart. Frame it completely.
2. While viewing the Resolution Chart on the EVF confirm that the horizontal resolution is approximately 270 lines.

[4] ELECTRONIC VIEWFINDER CIRCUIT

Preparation:

Connect the viewfinder connector to the EVF connector on the camera head.

(1) HORIZONTAL FREQUENCY ADJUSTMENT

1. Turn the power switch on.
2. Aim the camera at the test pattern.
3. Short the base and emitter of Q903 using a jumper.
4. Adjust L905 for stable horizontal scanning.
5. Remove the jumper connected between base and emitter of Q903.
6. If the horizontal picture center is improperly positioned, adjust the center ring on the deflection coil assembly.
7. If the brightness is incorrect, adjust VR904 (brightness).

(2) Vertical Height

1. Aim the camera at the registration chart.
2. Adjust VR902 so that the circle is just circle.

(3) Focus

1. Aim the camera at the registration chart.
2. If the focus on viewfinder is improper but the picture on the monitor is OK, adjust VR903.

Location of Test Points and Controls

Process C.B.A.

VEPW0107A

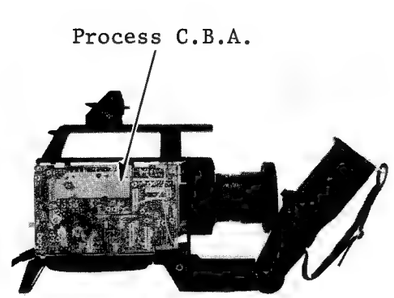

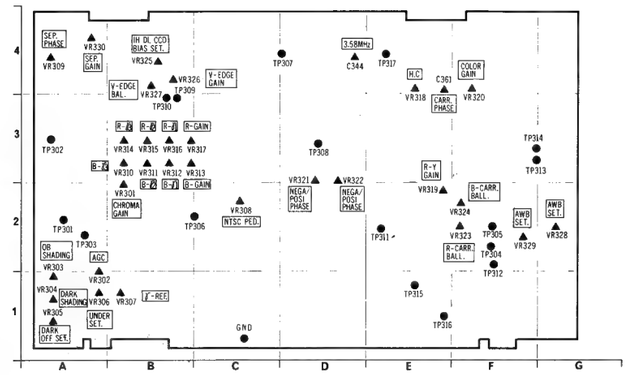

Deflection C.B.A.

VEPW0108A

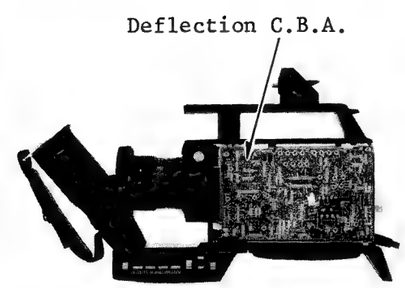

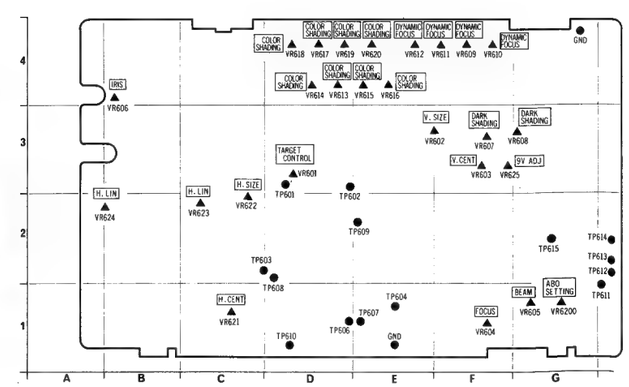

COLOR CAMERA SERVICING FIXTURES

LIGHT BOX w/CHART SET VFKS002

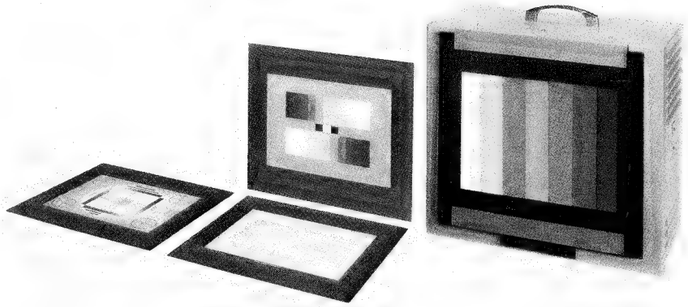

REFLECTION CHART SET VFKS003

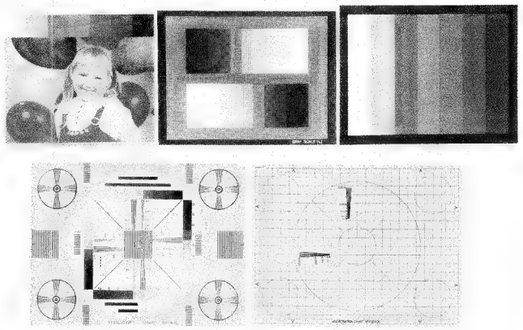

FM DETECTOR VFKS001

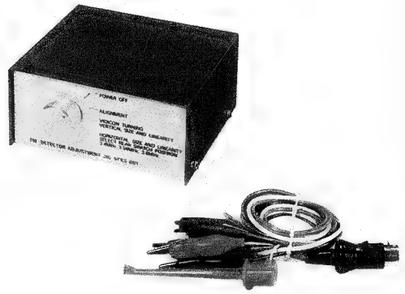

GRAY SCALE CHART VFKS002A

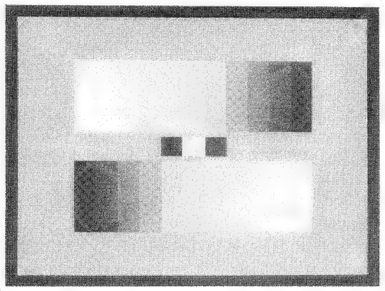

RESOLUTION CHART VFKS002D

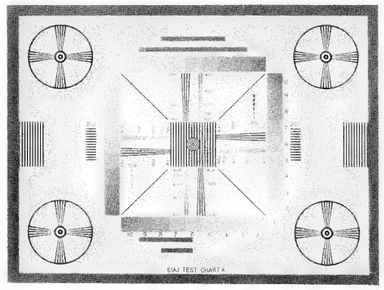

GRAY SCALE CHART VFKS003A

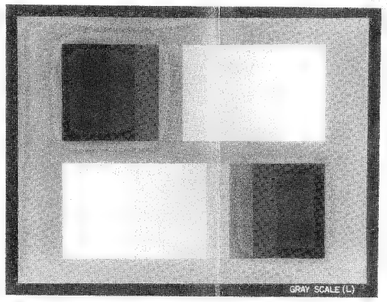

RESOLUTION CHART VFKS003D

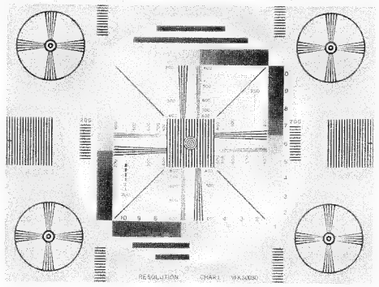

COLOR CHART VFKS002B

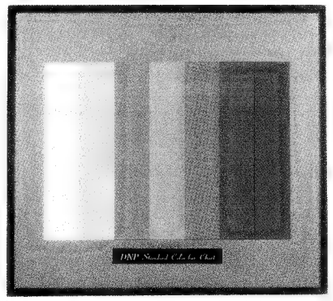

LIGHT BOX VFKS002Y

COLOR CHART VFKS003B

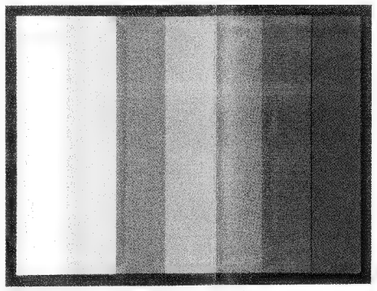

COLOR SHEET VFKS003E

REGISTRATION CHART VFKS002C

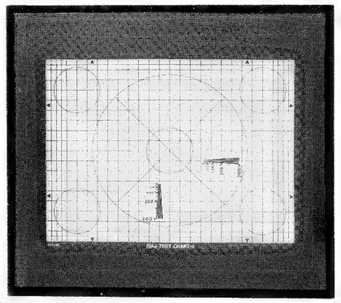

REGISTRATION CHART VFKS003C

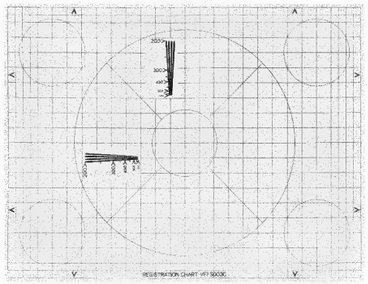

ORDER NO. VRD-8202-048

Service Manual

Color Video Camera

PK-802

Vol. 3

Block Diagrams

SPECIFICATIONS:

Power Source:	DC 12V ± 10% AC 120V ± 10%, 60Hz ± 0.5% (with Power Supply Unit)
Power Consumption:	DC 5.8W at 12V DC (Battery)
(with E.V.F)	DC 1.2W at standby
Special Tube System:	2/3″ frequency separation single tube system (built-in stripe filter)
Single Carrier Frequency:	4.3MHz
Focus System:	Electro-static type
Lens Mounting:	Built-in zoom lens (not "C" mount)
Lens:	6:1 zoom lens with auto/manual iris control. Auto zoom lens and macro construction F: 1.4, f: 12mm—72mm d: 1.0m to infinity
Lens Diameter:	49mm
Light Sensitivity:	Minimum light intensity on optical image: 40 Lux (F: 1.4) Optimum light intensity on optical image: 900 Lux
Video Output Level:	1.0Vp-p, 75Ω (M type coaxial connector) (Standard NTSC signal)
Sync. System:	Internal Sync: RS-170
Signal to Noise Ratio:	More than 45dB
Horizontal Resolution:	More than 270 lines
Color Temperature Control:	2 step switch (indoor/outdoor) & auto adjust
Microphone:	Condenser Microphone
Audio Output Level:	−20dB, Hi-impedance
Audio Output Impedance:	High impedance (1KΩ)
External Microphone Input Impedance:	600Ω unbalanced
Electronic Viewfinder:	Monochrome 1 inch CRT
Operating Temperature:	5°C to 35°C
Operating Humidity:	10% to 75%
Operating Position:	Normal position only
Weight:	Camera Head with E.V.F. 5.1 lbs (with lens, 7ft. cable & shoulder pad/handle grip) AC adaptor (option) 2.4 lbs
Dimensions:	Camera Head with E.V.F. 8.3″(W) × 8.7″(H) × 11.2″(D) 208mm(W) × 218mm(H) × 282mm(D) AC adaptor (option) 3″(W) × 3″(H) × 6″(D) 80mm(W) × 75mm(H) × 149mm(D)

Weight and dimensions shown are approximate.
Specifications are subject to change without notice.

Panasonic

Panasonic Company
Division of Matsushita Electric
Corporation of America
One Panasonic Way, Secaucus,
New Jersey 07094

Panasonic Hawaii Inc.
91-238 Kauhi St. Ewa Beach
P.O. Box 774
Honolulu, Hawaii 96808-0774

Panasonic Canada
Division of Matsushita Electric
of Canada Limited
5770 Ambler Drive, Mississauga,
Ontario, L4W 2T3

Panasonic Sales Company,
Division of Matsushita Electric
of Puerto Rico, Inc.
Ave, 65 De Infanteria, KM 9.7
Victoria Industrial Park
Carolina, Puerto Rico 00630

CONTENTS

OVERALL BLOCK DIAGRAM 3-1
DEFLECTION BLOCK DIAGRAM 3-2
PROCESS BLOCK DIAGRAM 3-3
MICRO COMPUTER BLOCK DIAGRAM
(1) Serial Date/Clock Signal Path 3-4
(2) Title & L.T Mode 3-5
(3) INF Mode 3-6
(4) Fade Mode 3-7
CAMERA REMOTE CONTROL (H) BLOCK DIAGRAM 3-8
CAMERA REMOTE CONTROL (M) BLOCK DIAGRAM 3-8
CAMERA REMOTE CONTROL (S) BLOCK DIAGRAM 3-9
ELECTRONIC VIEWFINDER BLOCK DIAGRAM 3-10

DEFLECTION BLOCK DIAGRAM

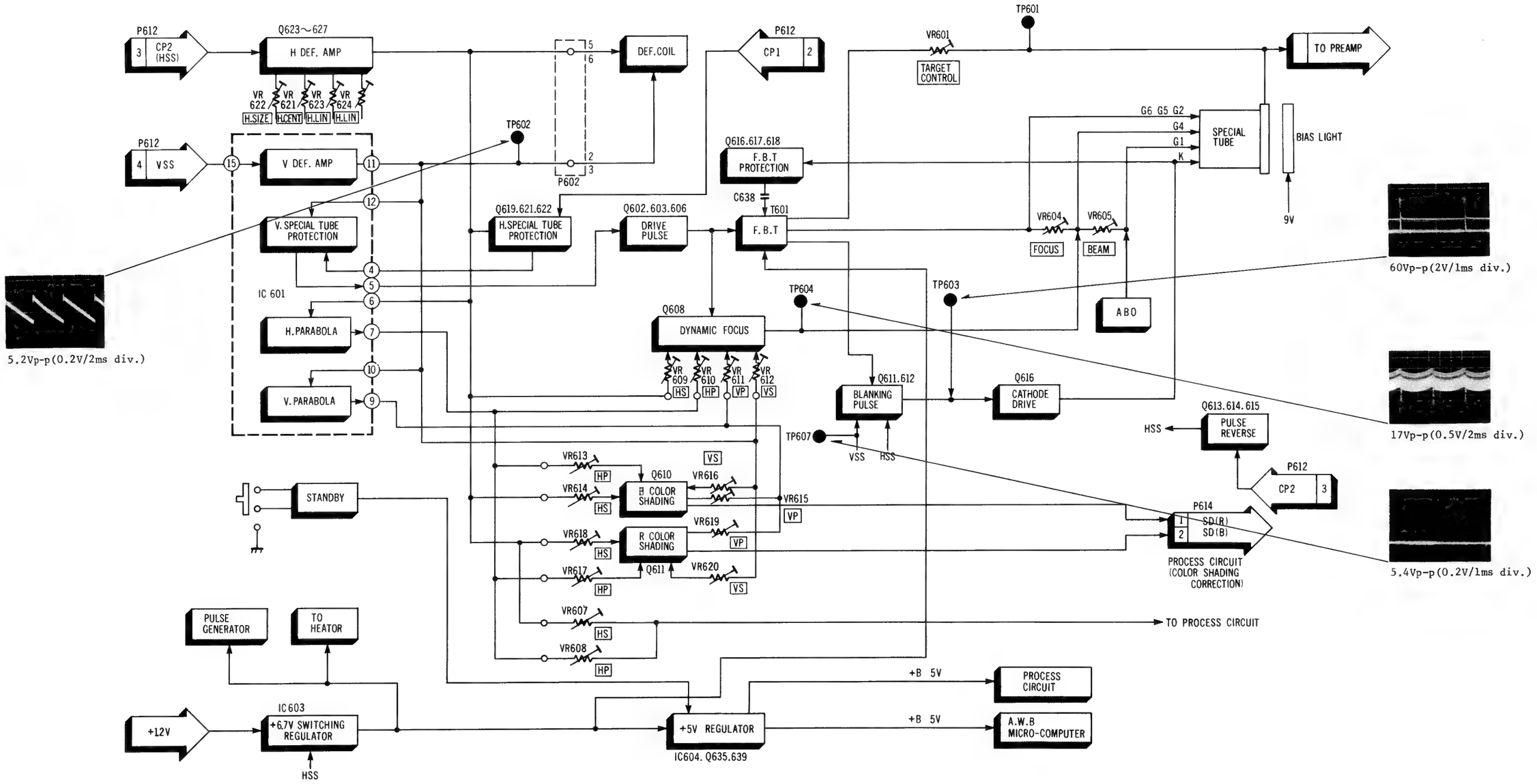

OVERALL BLOCK DIAGRAM

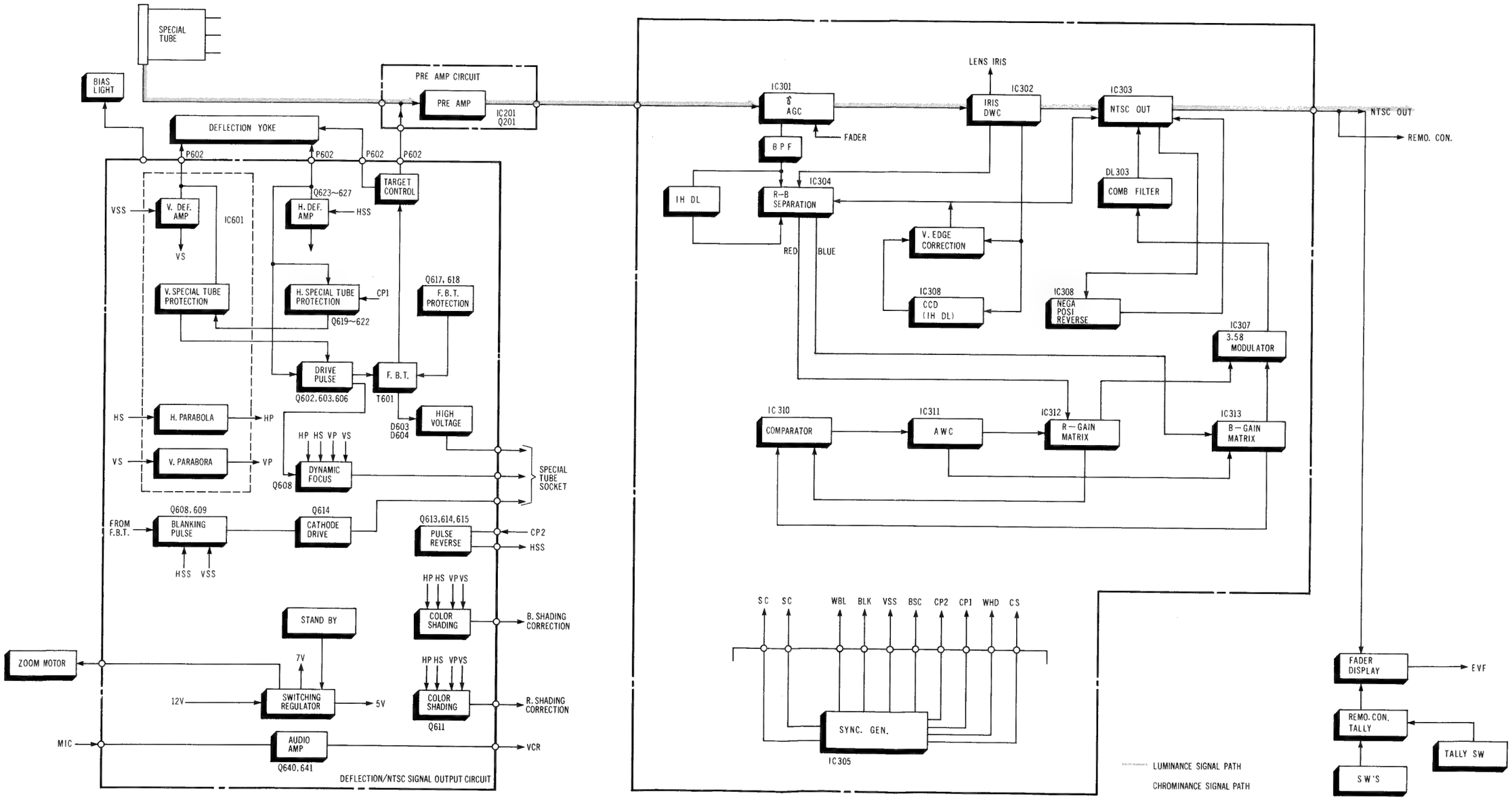

PROCESS BLOCK DIAGRAM

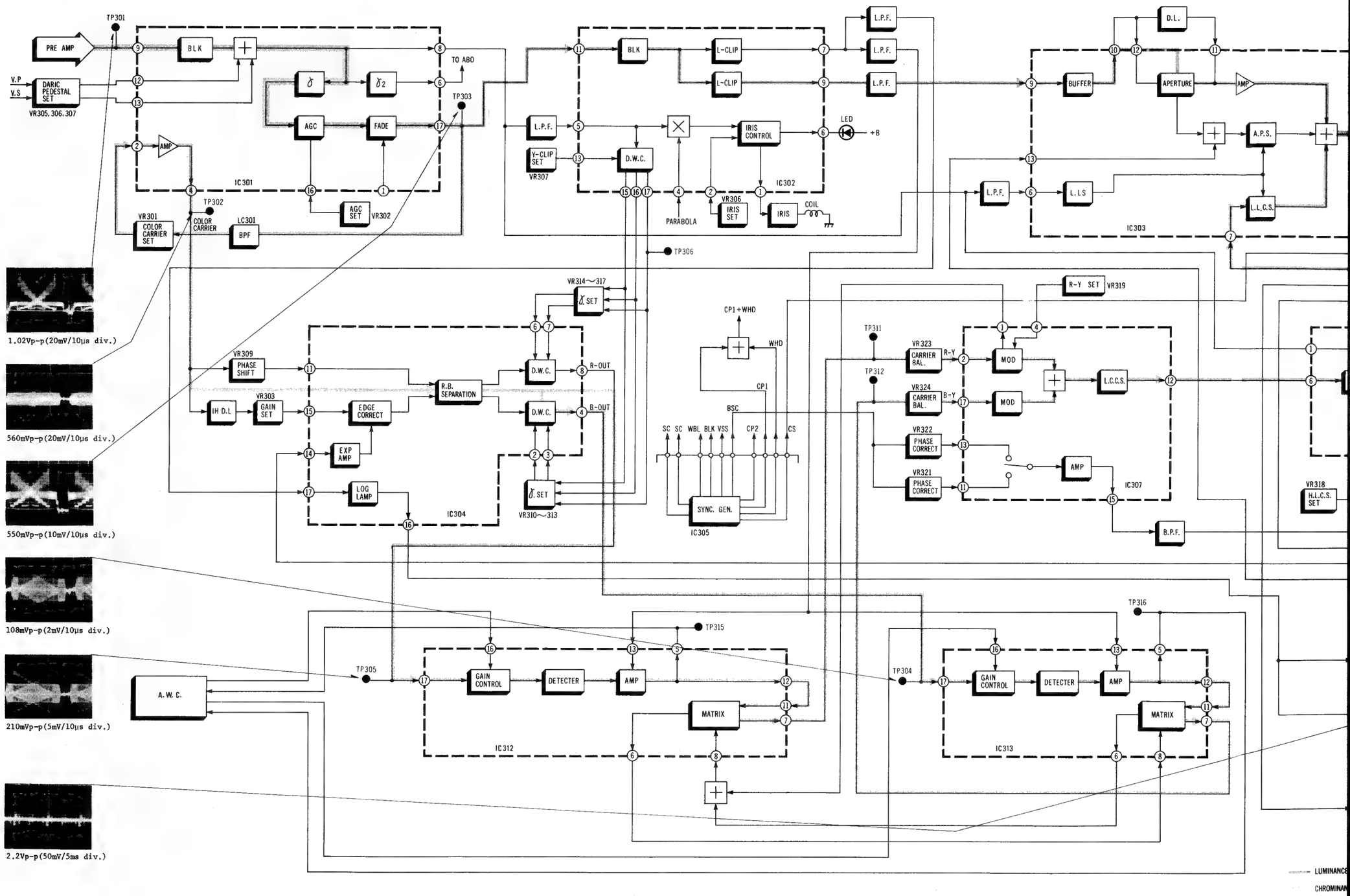

AM

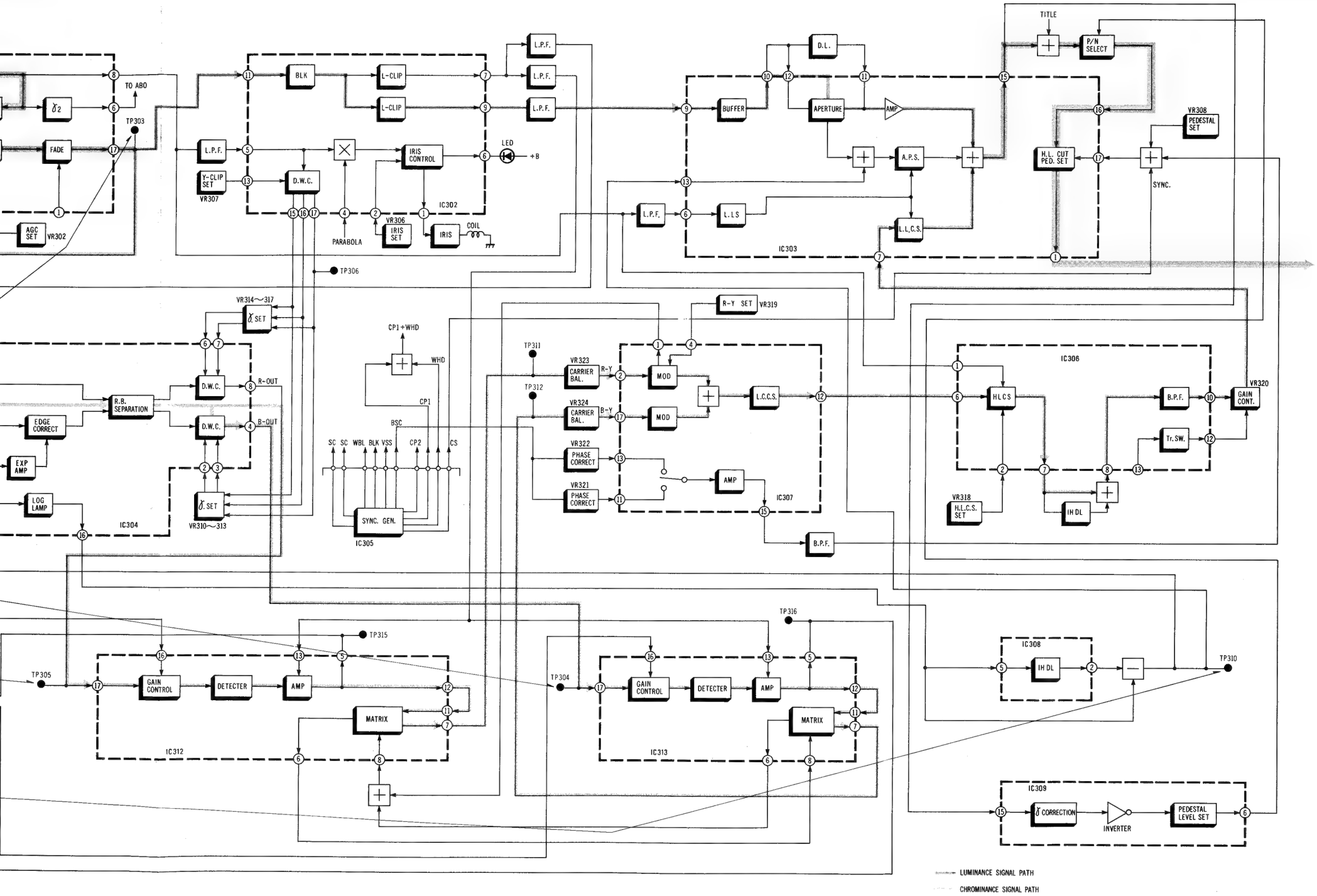

LUMINANCE SIGNAL PATH

CHROMINANCE SIGNAL PATH

MICRO COMPUTER BLOCK DIAGRAM (SERIAL DATA/CLOCK SIGNAL PATH)

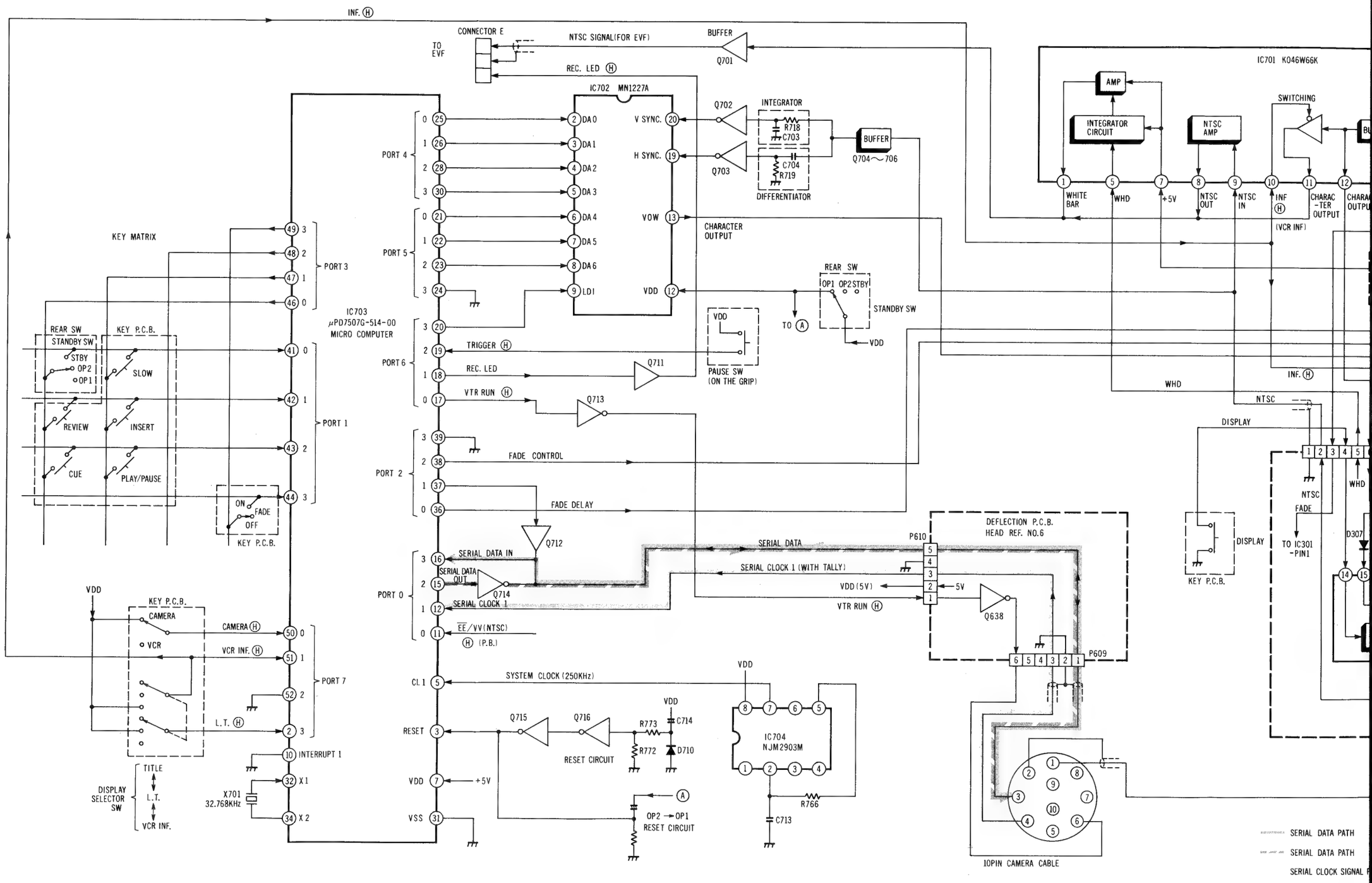

DIAGRAM (SERIAL DATA/CLOCK SIGNAL PATH)

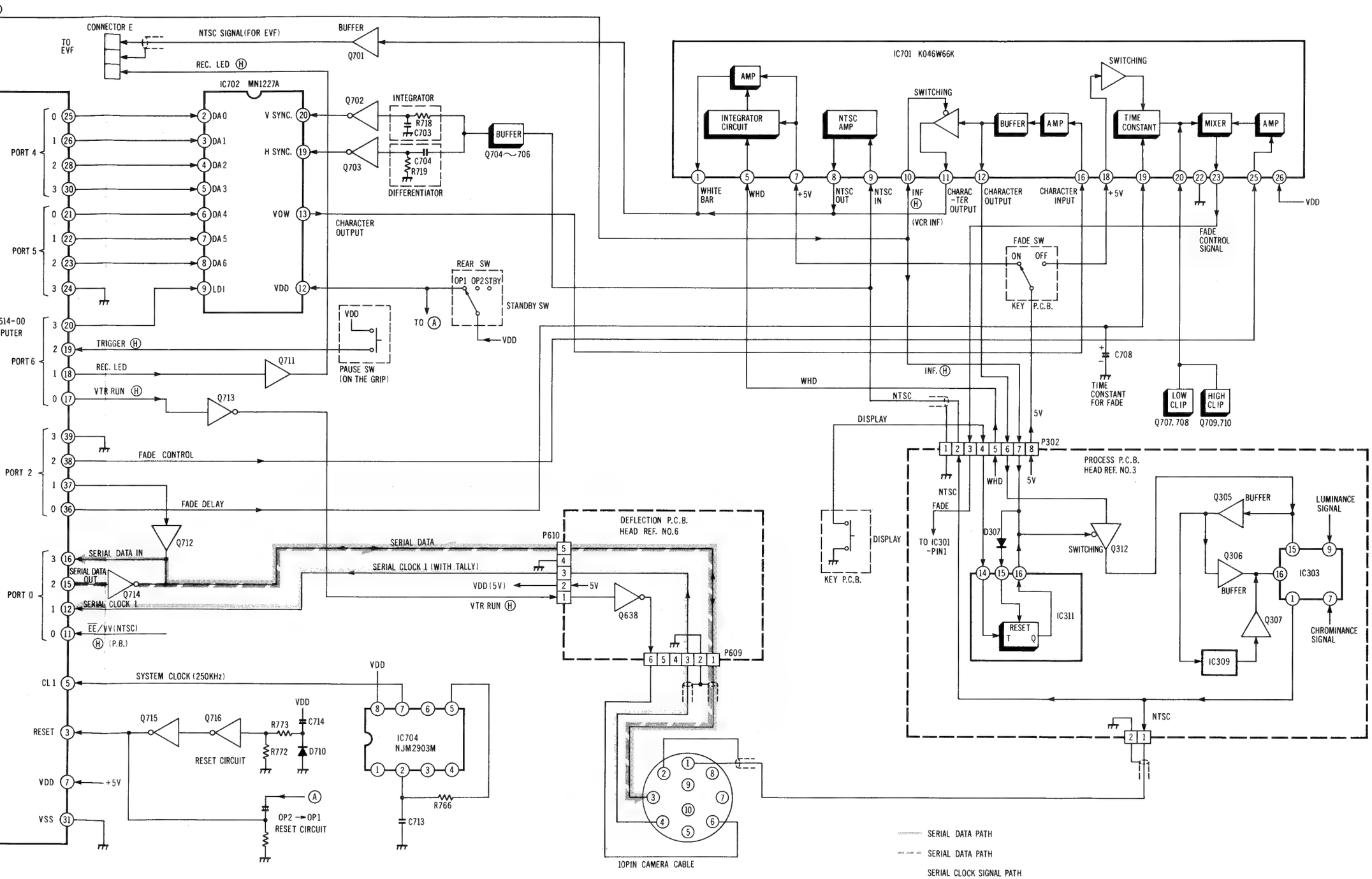

MICRO COMPUTER BLOCK DIAGRAM (TITLE & L.T MODE)

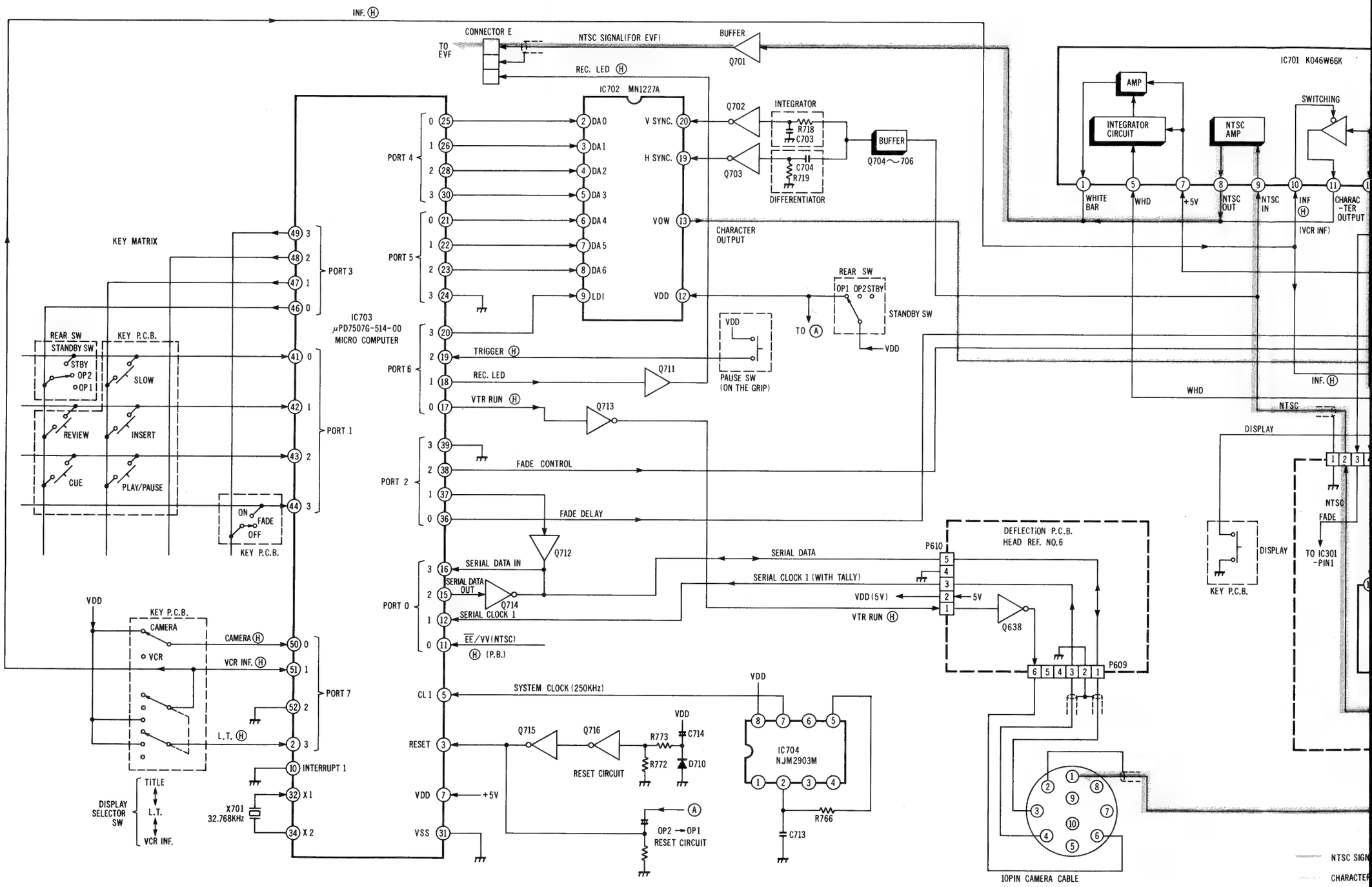

DIAGRAM (TITLE & L.T MODE)

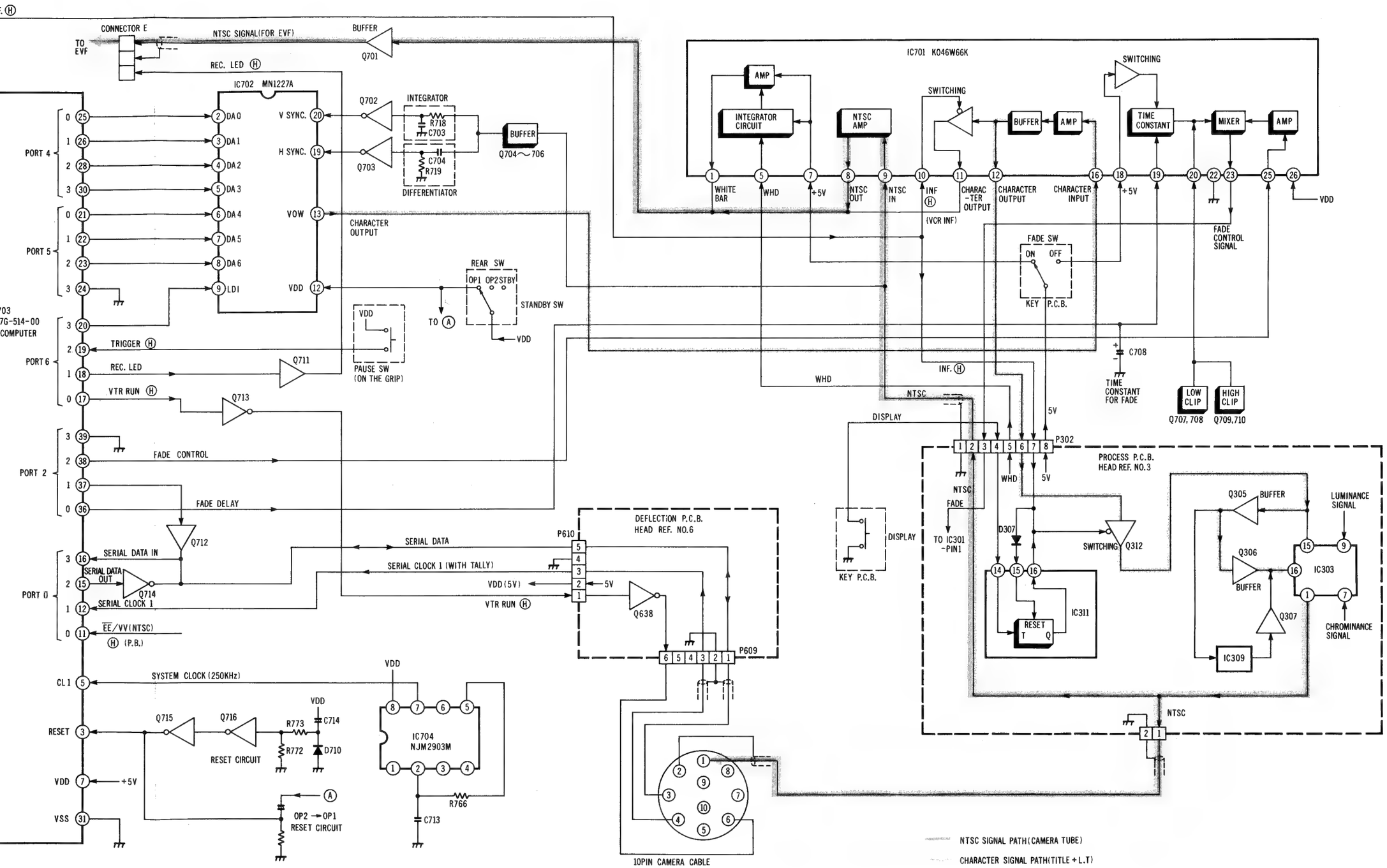

MICRO COMPUTER BLOCK DIAGRAM (INF MODE)

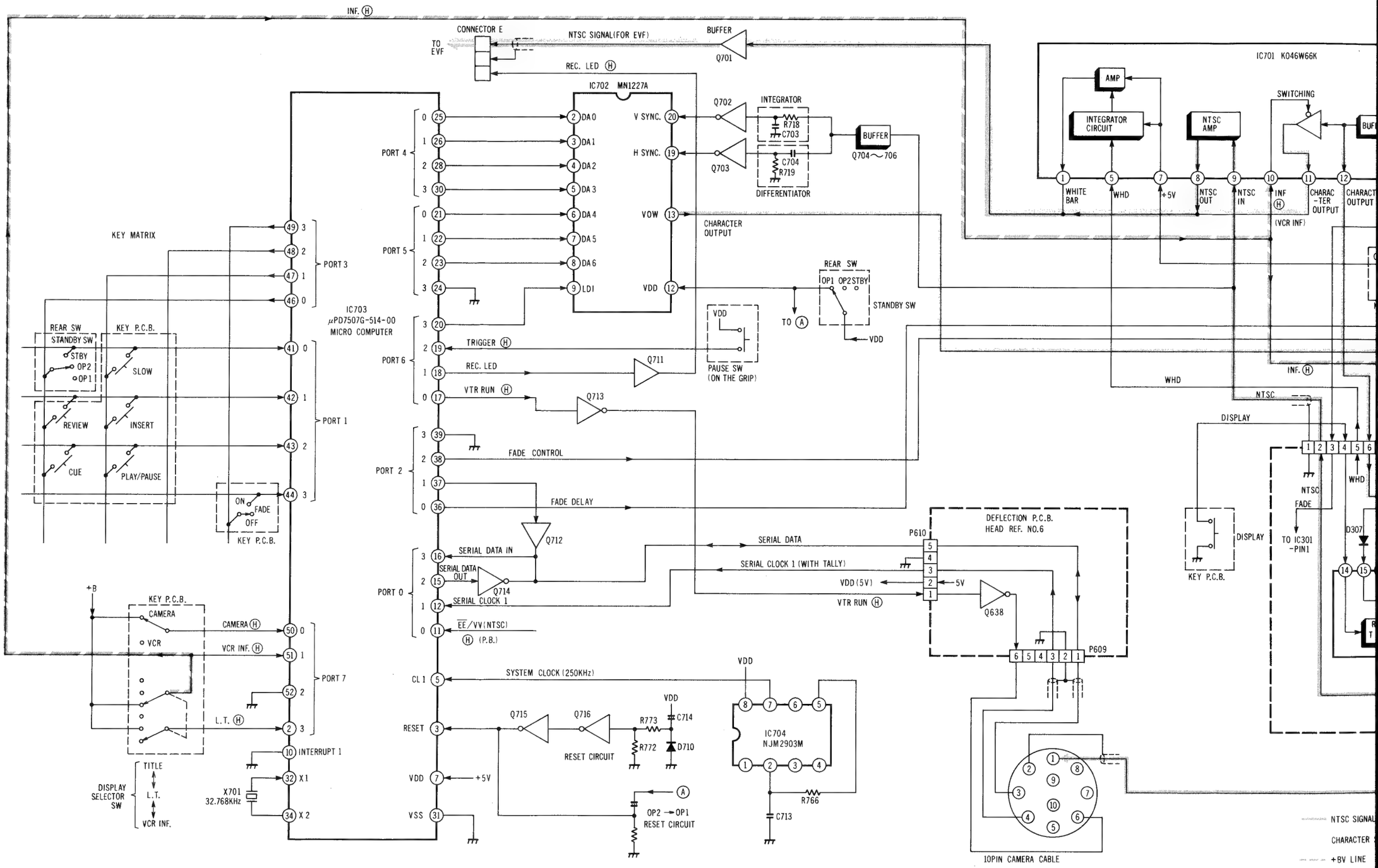

IAGRAM (INF MODE)

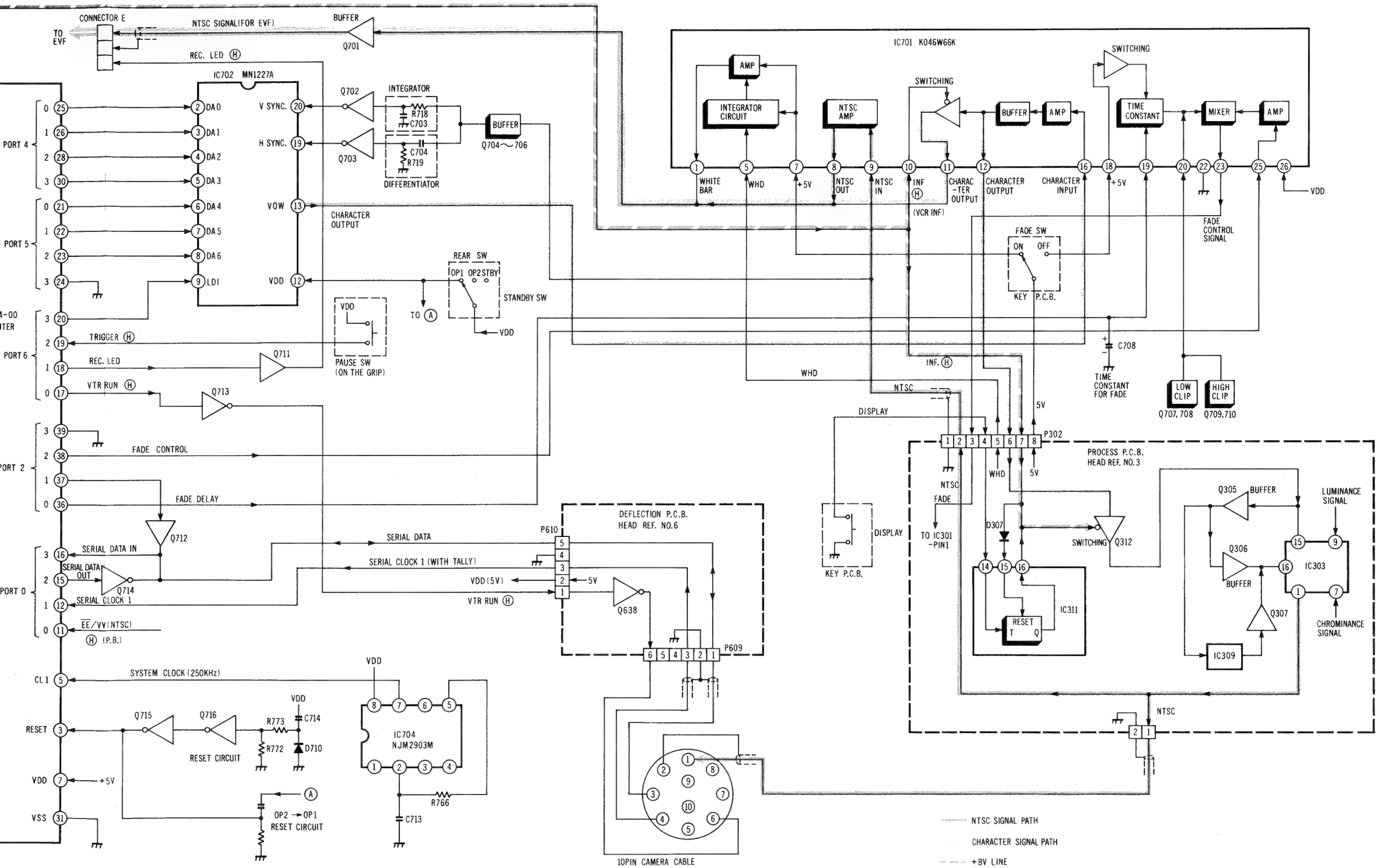

MICRO COMPUTER BLOCK DIAGRAM (FADE MODE)

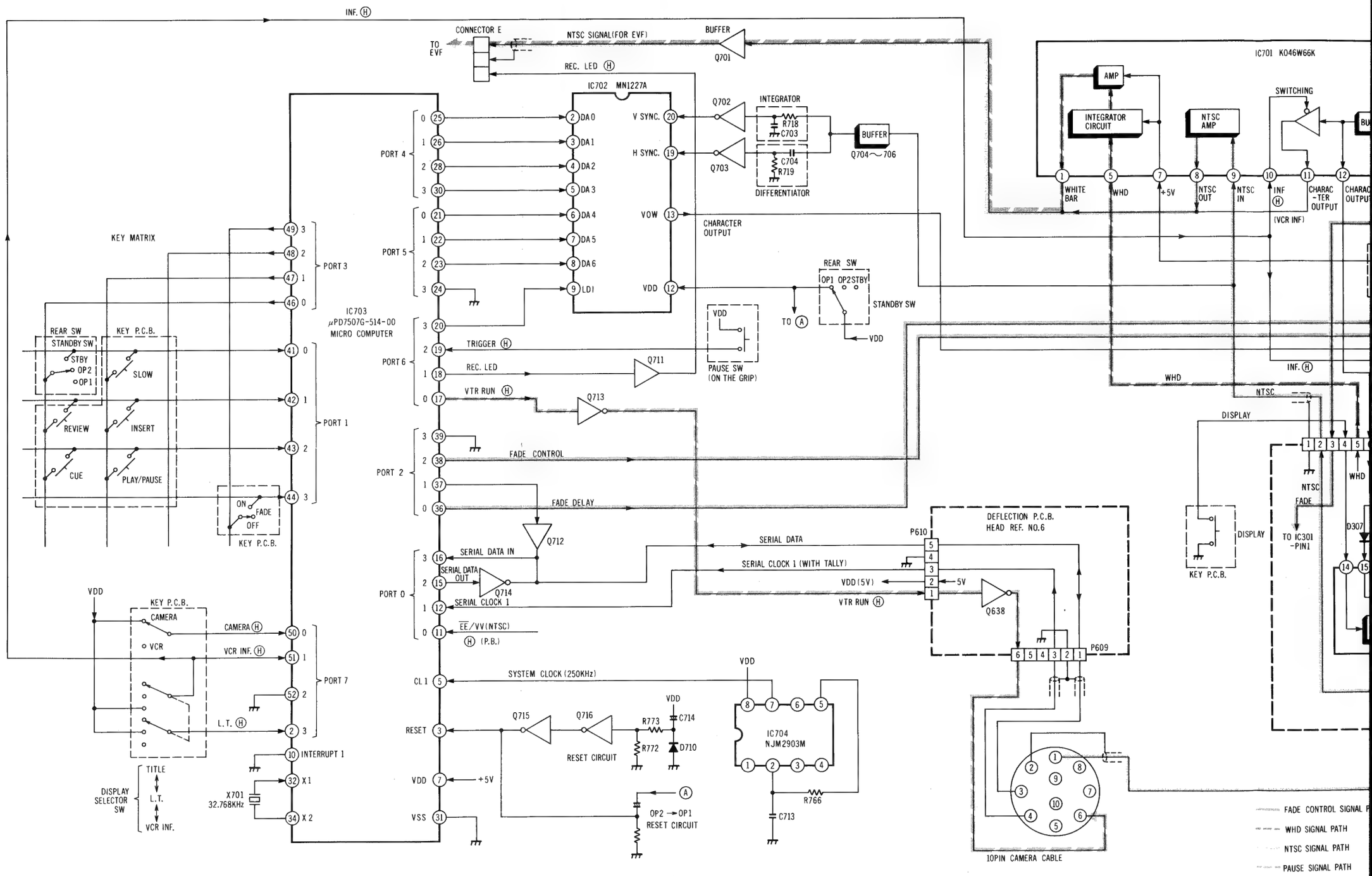

DIAGRAM (FADE MODE)

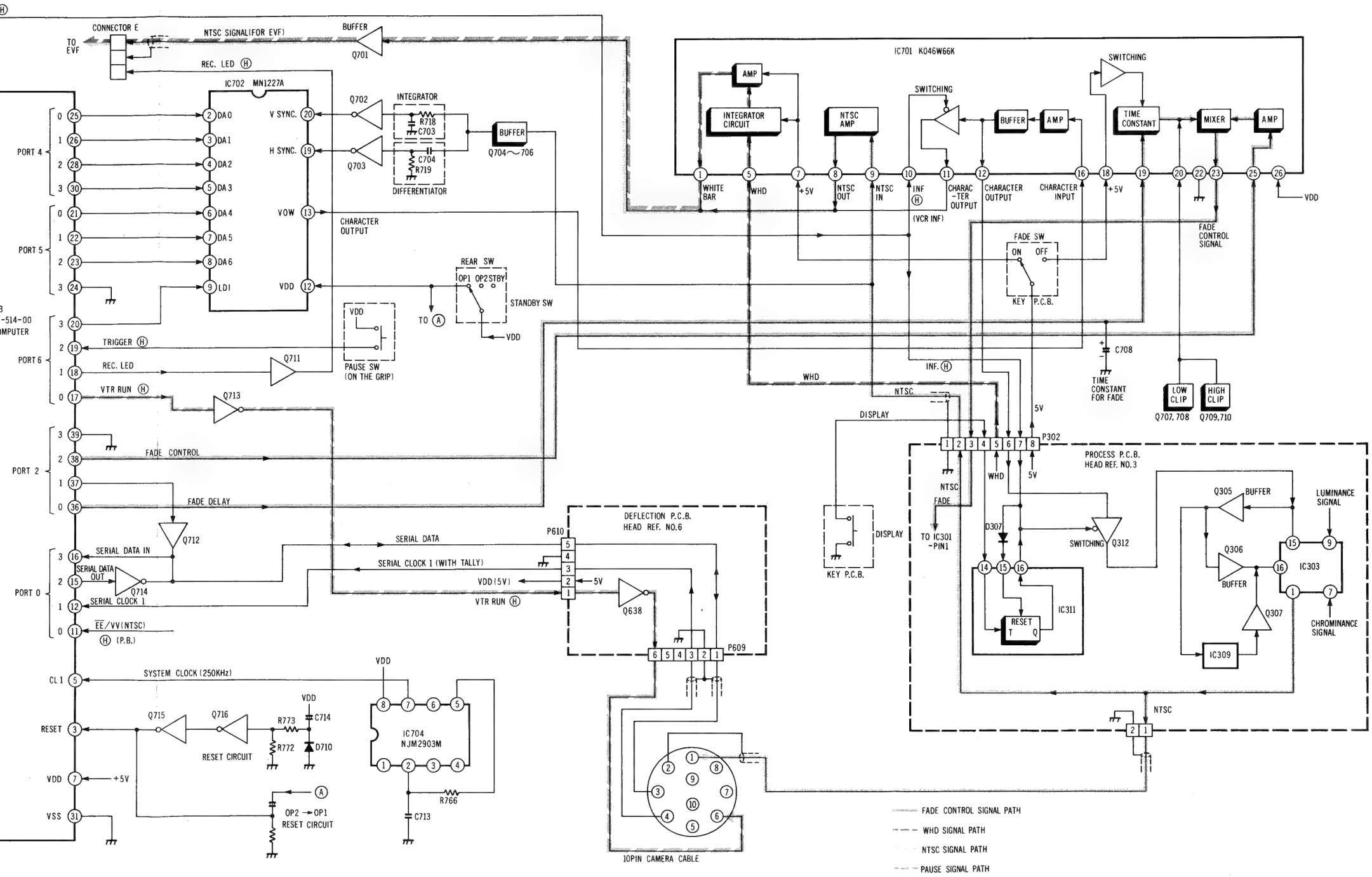

DIAGRAM

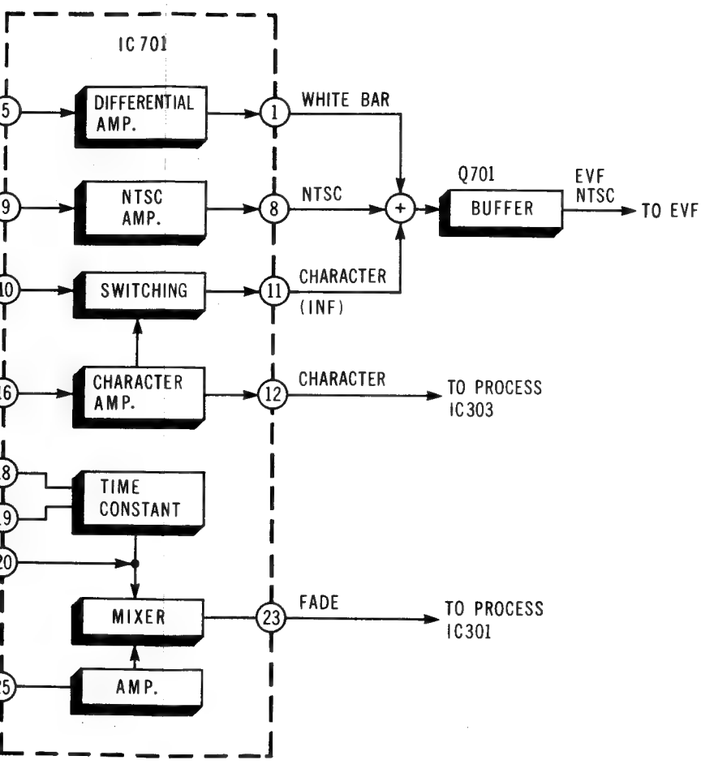

CAMERA REMOTE CONTROL (M) BLOCK DIAGRAM

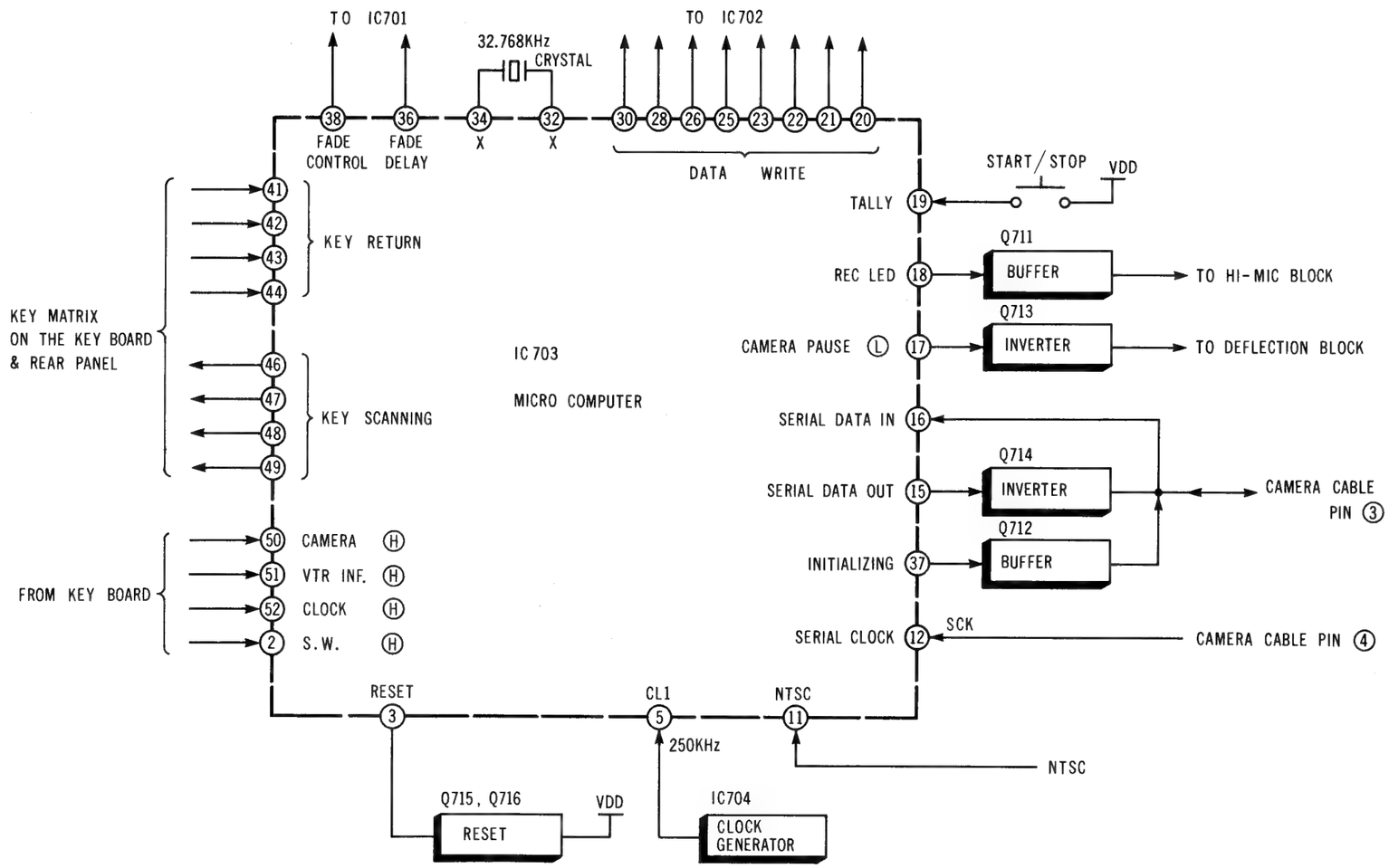

CAMERA REMOTE CONTROL (S) BLOCK DIAGRAM

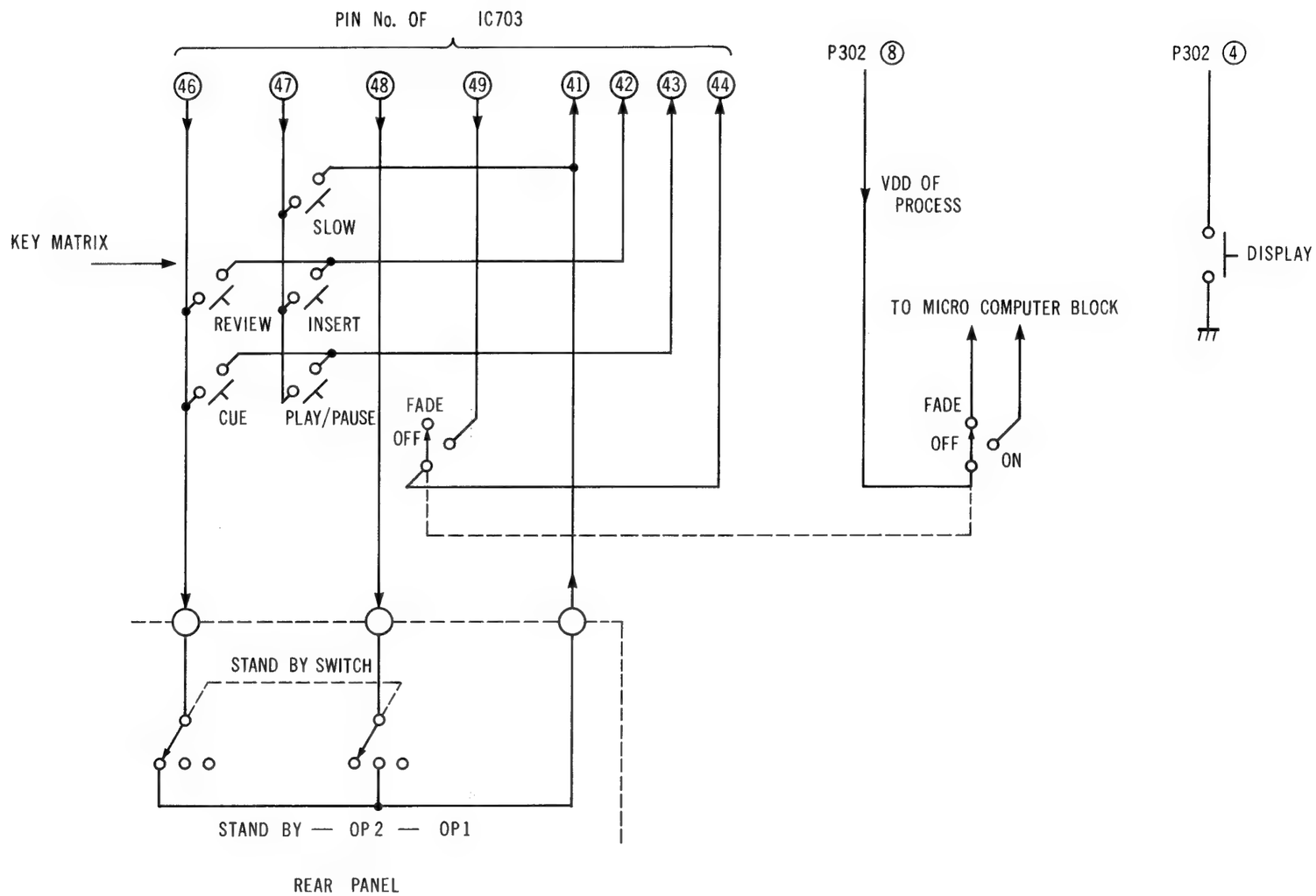

ELECTRONIC VIEWFINDER BLOCK DIAGRAM

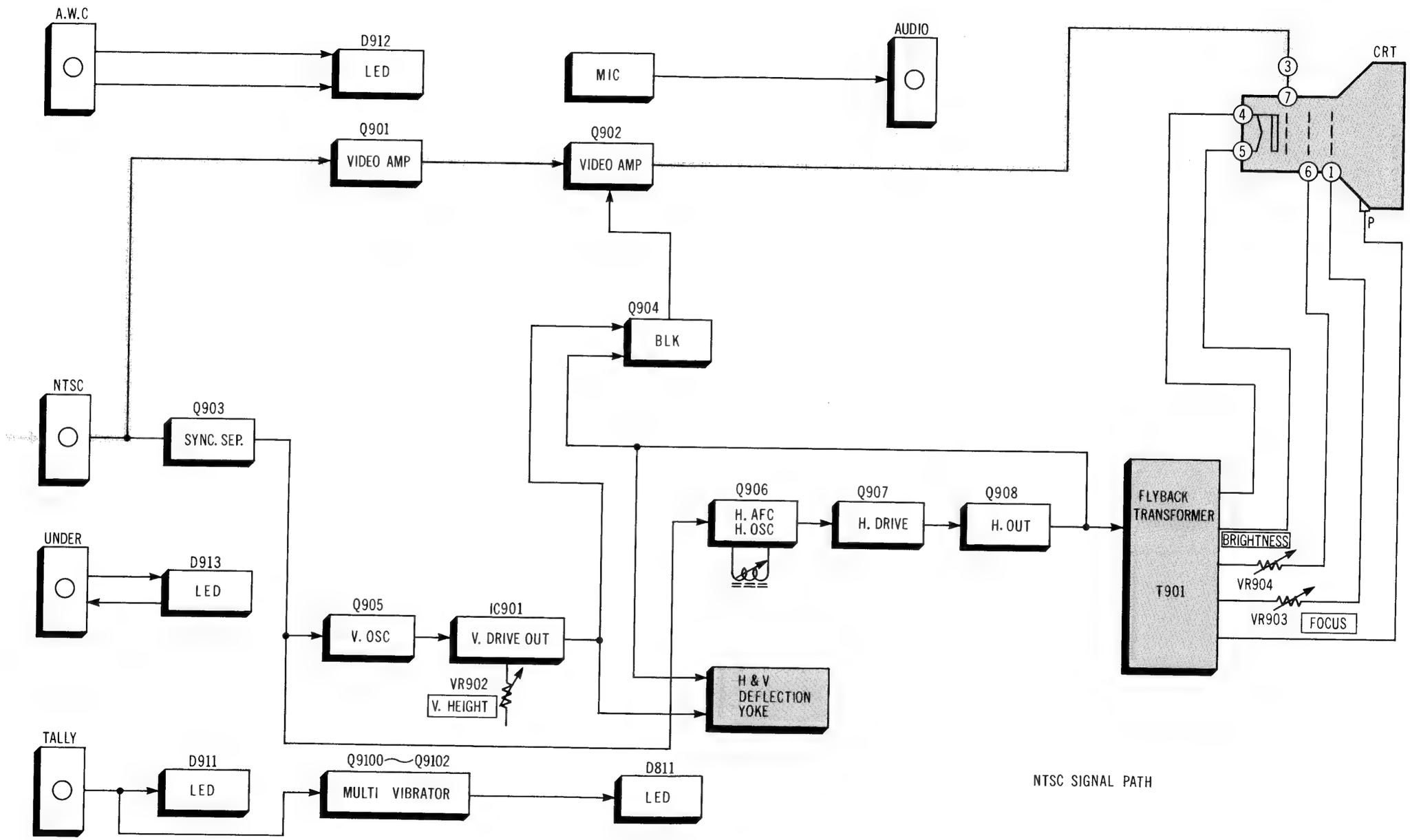

PRODUCT SAFETY NOTE

The shaded area on this **block diagram** incorporates special features important for protection from X-Radiation, fire and electrical shock hazards when servicing it is essential that only manufacturer's specified parts be used for the critical components in the shaded areas of the **block diagram**

ORDER NO. VRD-8202-048

Service Manual

Color Video Camera

PK-802

Vol. 4

Schematic Diagrams

SPECIFICATIONS:

Power Source:	DC 12V ± 10% AC 120V ± 10%, 60Hz ± 0.5% (with Power Supply Unit)
Power Consumption: **(with E.V.F)**	DC 5.8W at 12V DC (Battery) DC 1.2W at standby
Special Tube System:	2/3″ frequency separation single tube system (built-in stripe filter)
Single Carrier Frequency:	4.3MHz
Focus System:	Electro-static type
Lens Mounting:	Built-in zoom lens (not "C" mount)
Lens:	6:1 zoom lens with auto/manual iris control. Auto zoom lens and macro construction F: 1.4, f: 12mm—72mm d: 1.0m to infinity
Lens Diameter:	49mm
Light Sensitivity:	Minimum light intensity on optical image: 40 Lux (F: 1.4) Optimum light intensity on optical image: 900 Lux
Video Output Level:	1.0Vp-p, 75Ω (M type coaxial connector) (Standard NTSC signal)
Sync. System:	Internal Sync: RS-170
Signal to Noise Ratio:	More than 45dB
Horizontal Resolution:	More than 270 lines
Color Temperature Control:	2 step switch (indoor/outdoor) & auto adjust
Microphone:	Condenser Microphone
Audio Output Level:	−20dB, Hi-impedance
Audio Output Impedance:	High impedance (1KΩ)
External Microphone Input Impedance:	600Ω unbalanced
Electronic Viewfinder:	Monochrome 1 inch CRT
Operating Temperature:	5°C to 35°C
Operating Humidity:	10% to 75%
Operating Position:	Normal position only
Weight:	Camera Head with E.V.F. 5.1 lbs (with lens, 7ft. cable & shoulder pad/handle grip) AC adaptor (option) 2.4 lbs
Dimensions:	Camera Head with E.V.F. 8.3″(W) × 8.7″(H) × 11.2″(D) 208mm(W) × 218mm(H) × 282mm(D) AC adaptor (option) 3″(W) × 3″(H) × 6″(D) 80mm(W) × 75mm(H) × 149mm(D)

Weight and dimensions shown are approximate.
Specifications are subject to change without notice.

Panasonic®

Panasonic Company
Division of Matsushita Electric
Corporation of America
One Panasonic Way, Secaucus,
New Jersey 07094

Panasonic Hawaii Inc.
91-238 Kauhi St. Ewa Beach
P.O. Box 774
Honolulu, Hawaii 96808-0774

Panasonic Canada
Division of Matsushita Electric
of Canada Limited
5770 Ambler Drive, Mississauga,
Ontario, L4W 2T3

Panasonic Sales Company,
Division of Matsushita Electric
of Puerto Rico, Inc.
Ave, 65 De Infanteria, KM 9.7
Victoria Industrial Park
Carolina, Puerto Rico 00630

CONTENTS

PRE-AMP SCHEMATIC DIAGRAM 4-1
PRE-AMP CIRCUIT BOARD (VEPW0106A) 4-1
PROCESS CIRCUIT BOARD (VEPW0107A) 4-2
PROCESS SCHEMATIC DIAGRAM 4-3
DEFLECTION SCHEMATIC DIAGRAM 4-4
DEFLECTION CIRCUIT BOARD (VEPW0108A) 4-5
REAR SIDE SCHEMATIC DIAGRAM 4-6
REAR SIDE CIRCUIT BOARD (VEPW0110) 4-6
REMOTE CONTROL SW CIRCUIT BOARD (VEPW0111) 4-6
FRONT CIRCUIT BOARD (VEPW0113) 4-6
SPECIAL TUBE SOCKET CIRCUIT BOARD (VEPW0124) 4-6
POWER ZOOM SW SCHEMATIC DIAGRAM 4-7
POWER ZOOM SW (A) CIRCUIT BOARD (VEPW0112) 4-7
POWER ZOOM SW (B) CIRCUIT BOARD (VEPW0119) 4-7
BIAS LIGHT CIRCUIT BOARD 4-7
CAMERA REMOTE CONTROL (S) SCHEMATIC DIAGRAM 4-8
CAMERA REMOTE CONTROL (S) CIRCUIT BOARD (VEPW0116) 4-8
CAMERA REMOTE CONTROL (H) SCHEMATIC DIAGRAM 4-9
CAMERA REMOTE CONTROL (H) CIRCUIT BOARD (VEPW0114) 4-9
CAMERA REMOTE CONTROL (M) SCHEMATIC DIAGRAM 4-10
CAMERA REMOTE CONTROL (M) CIRCUIT BOARD (VEPW0115) 4-10
ELECTRONIC VIEWFINDER SCHEMATIC DIAGRAM 4-11
ELECTRONIC VIEWFINDER (A) CIRCUIT BOARD (VEPW0122) 4-11
ELECTRONIC VIEWFINDER (B) CIRCUIT BOARD (VEPW0135) 4-11
EVF LED CIRCUIT BOARD (VEPW0123) 4-11
ELECTRONIC VIEWFINDER INTERCONNECTION SCHEMATIC DIAGRAM .. 4-12
POWER SUPPLY SCHEMATIC DIAGRAM
(OPTIONAL ACCESSORY) 4-12
POWER SUPPLY CIRCUIT BOARD 4-12
CIRCUIT BOARD LAYOUT 4-13
CAMERA UNIT INTERCONNECTION SCHEMATIC DIAGRAM 4-13

PRE-AMP SCHEMATIC DIAGRAM

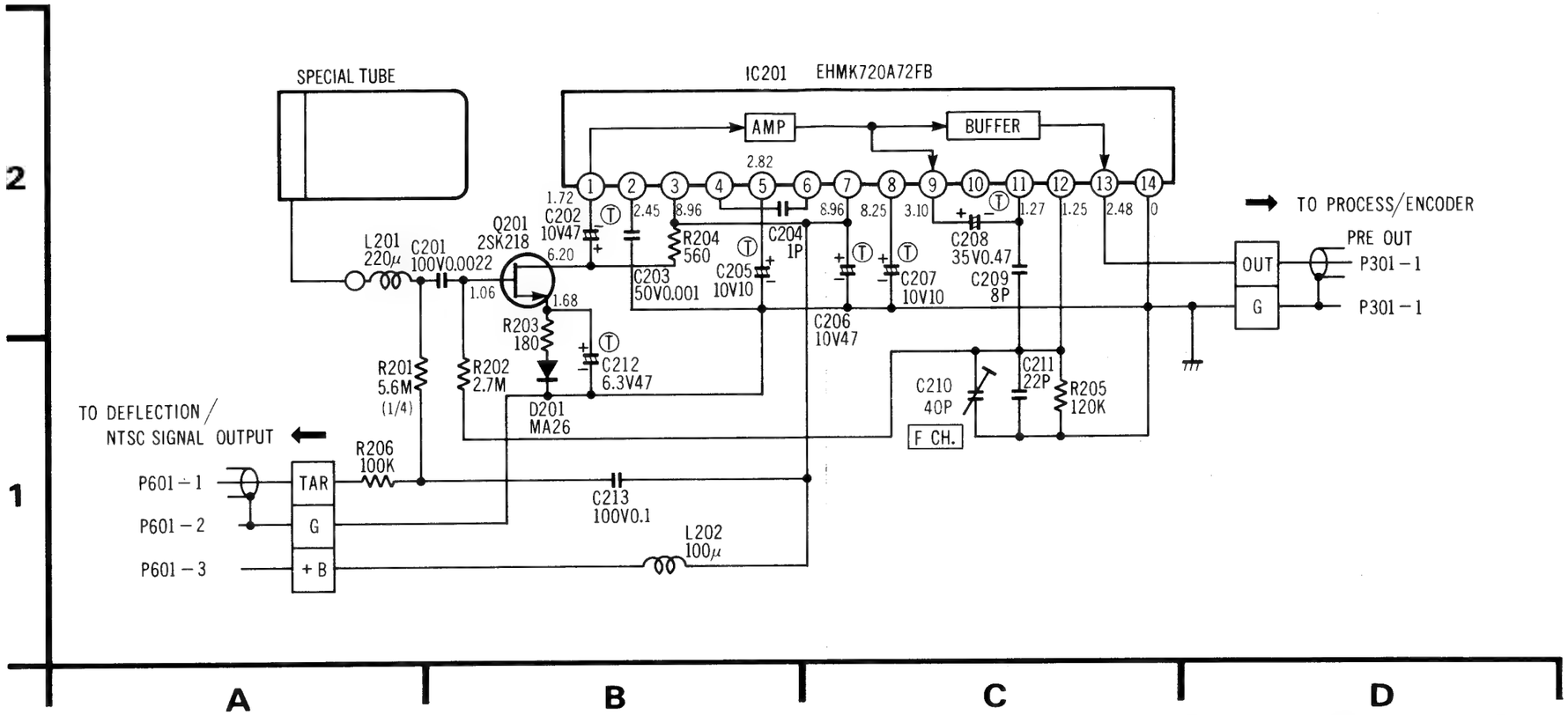

PRE-AMP CIRCUIT BOARD (VEPW0106A)

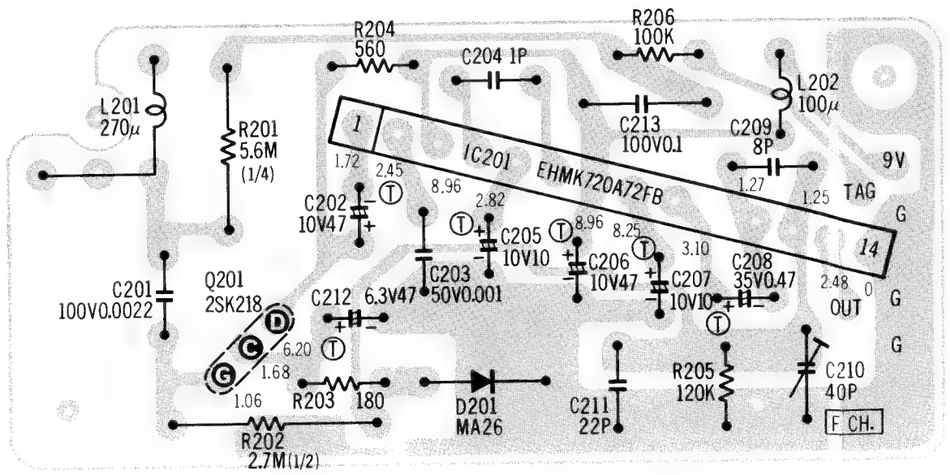

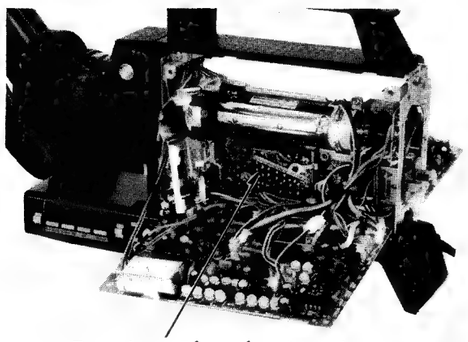

Pre-Amp Circuit Board

PRE-AMP SCHEMATIC DIAGRAM

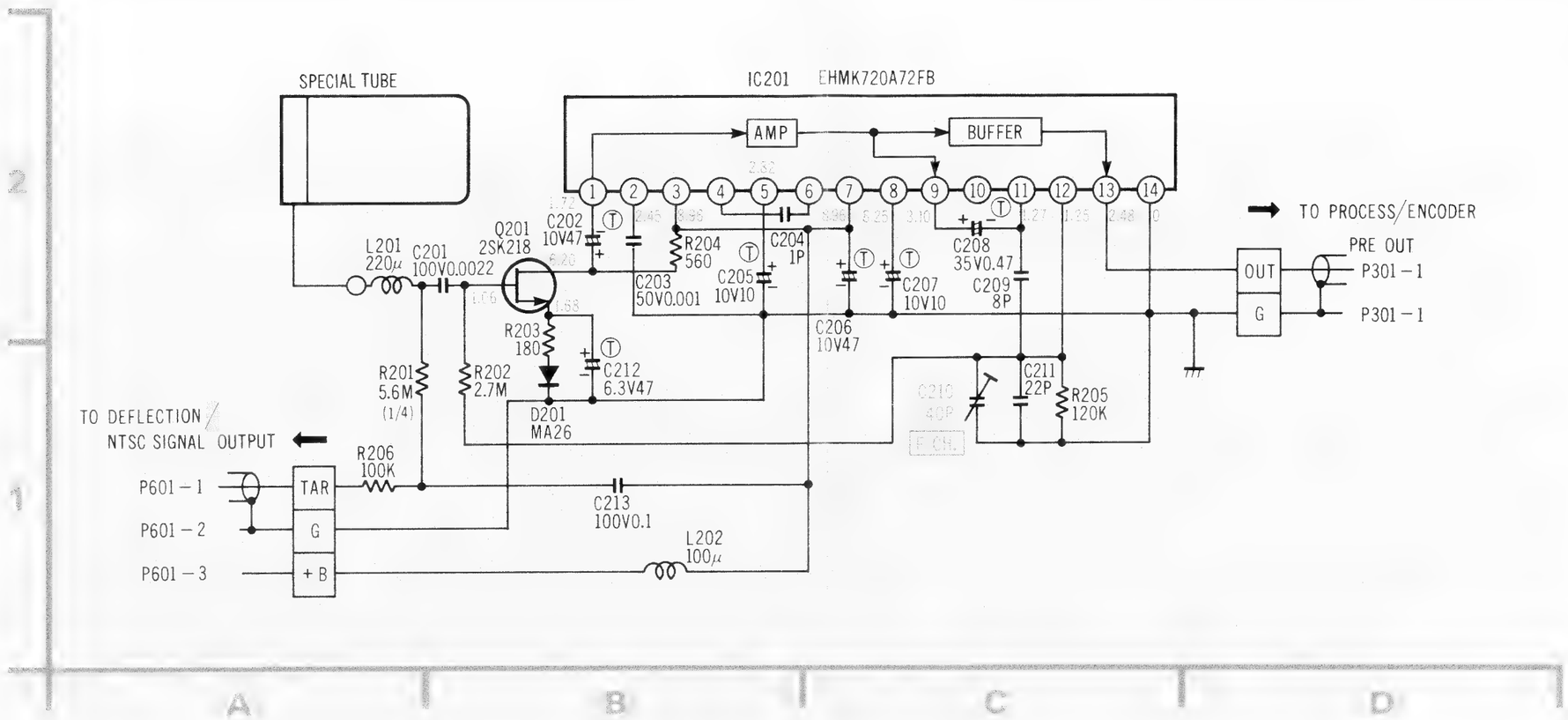

PRE-AMP CIRCUIT BOARD (VEPW0106A)

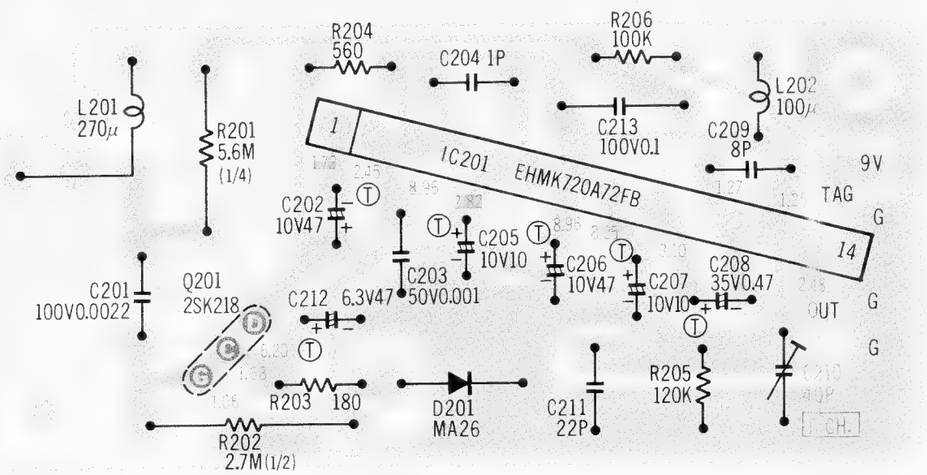

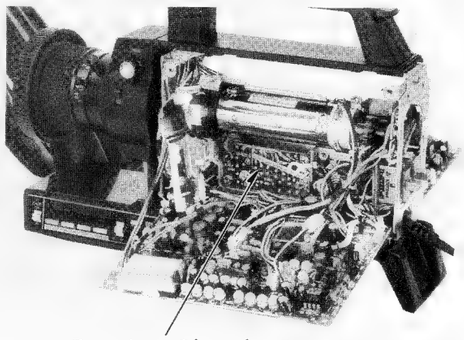

Pre-Amp Circuit Board

PROCESS CIRCUIT BOARD (VEPW0107A)

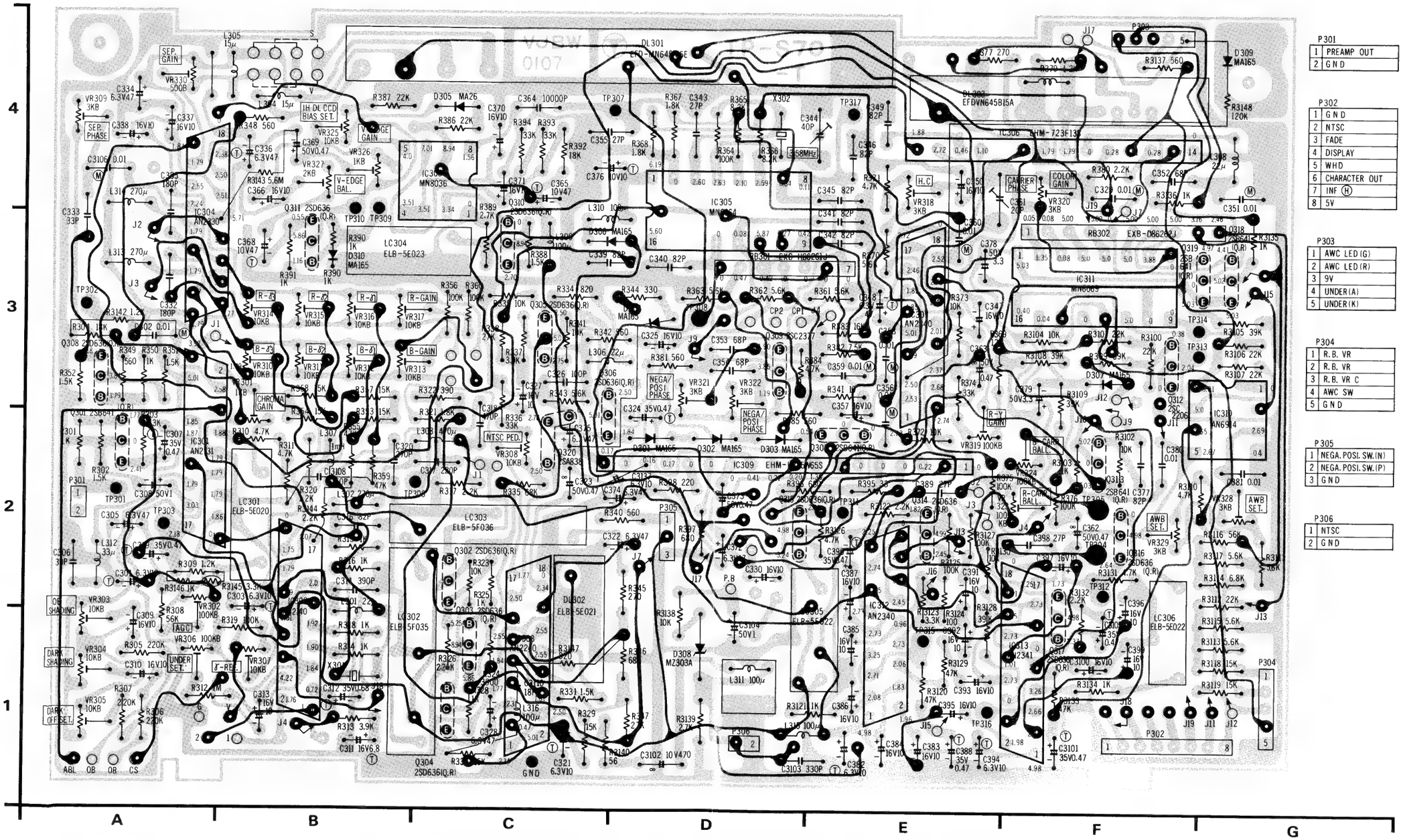

P301	
1	PREAMP OUT
2	GND

P302	
1	GND
2	NTSC
3	FADE
4	DISPLAY
5	WHD
6	CHARACTER OUT
7	INF (H)
8	5V

P303	
1	AWC LED(G)
2	AWC LED(R)
3	9V
4	UNDER(A)
5	UNDER(K)

P304	
1	R.B. VR
2	R.B. VR
3	R.B. VR C
4	AWC SW
5	GND

P305	
1	NEGA. POSI. SW.(N)
2	NEGA. POSI. SW.(P)
3	GND

P306	
1	NTSC
2	GND

IC301	A-2
IC302	B-1
IC303	C-1
IC304	A-3
IC305	D-4
IC306	F-4
IC307	E-3
IC308	C-4
IC309	D-2
IC310	G-2
IC311	F-3
IC312	E-1
IC313	F-1
Q301	A-2
Q302	C-2
Q303	C-1
Q304	C-1
Q305	C-3
Q306	C-2
Q307	E-2
Q308	A-3
Q309	D-3
Q310	C-3
Q311	B-3
Q312	F-3
Q313	F-2
Q314	E-2
Q315	D-2
Q316	F-2
Q317	F-1
Q318	G-3
Q319	G-3
Q320	C-2
VR301	B-2
VR302	A-1
VR303	A-1
VR304	A-1
VR305	A-1
VR306	A-1
VR307	B-1
VR308	C-2
VR309	A-4
VR310	B-3
VR311	B-3
VR312	B-3
VR313	B-3
VR314	B-3
VR315	B-3
VR316	B-3
VR317	B-3
VR318	E-4
VR319	E-2
VR320	F-4
VR321	D-3
VR322	D-3
VR323	F-2
VR324	F-2
VR325	B-4
VR326	B-4
VR327	B-4
VR328	G-2
VR329	F-2
VR330	A-4
C344	D-4
C361	E-4

PROCESS CIRCUIT BOARD (VEPW0107A)

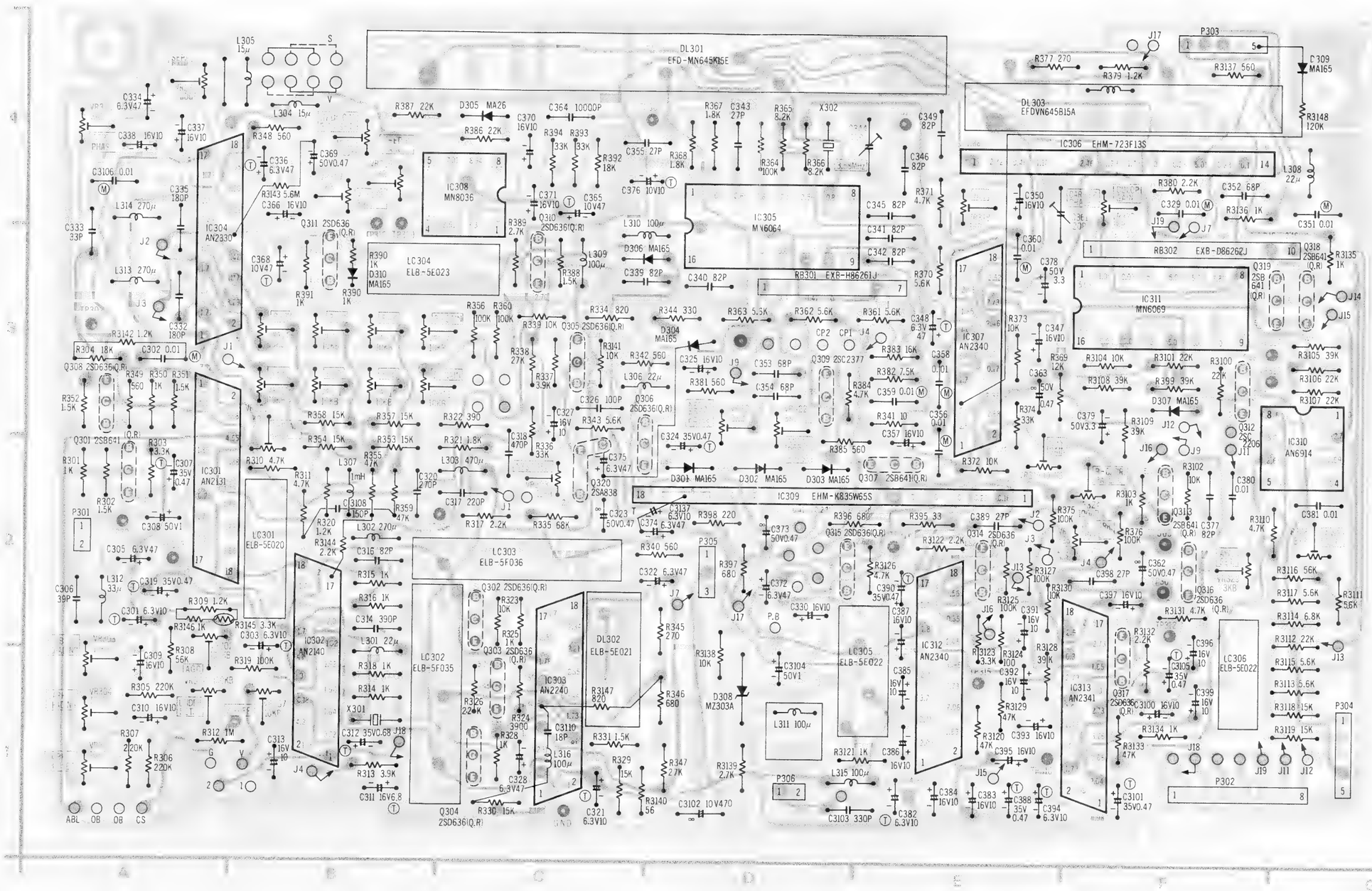

P301	
1	PREAMP OUT
2	GND

P302	
1	GND
2	NTSC
3	FADE
4	DISPLAY
5	WHD
6	CHARACTER OUT
7	INF (H)
8	5V

P303	
1	AWC LED(G)
2	AWC LED(R)
3	9V
4	UNDER(A)
5	UNDER(K)

P304	
1	R.B. VR
2	R.B. VR
3	R.B. VR C
4	AWC SW
5	GND

P305	
1	NEGA. POSI. SW.(N)
2	NEGA. POSI. SW.(P)
3	GND

P306	
1	NTSC
2	GND

IC301	A-2
IC302	B-1
IC303	C-1
IC304	A-3
IC305	D-4
IC306	F-4
IC307	E-3
IC308	C-4
IC309	D-2
IC310	G-2
IC311	F-3
IC312	E-1
IC313	F-1
Q301	A-2
Q302	C-2
Q303	C-1
Q304	C-1
Q305	C-3
Q306	C-2
Q307	E-2
Q308	A-3
Q309	D-3
Q310	C-3
Q311	B-3
Q312	F-3
Q313	F-2
Q314	E-2
Q315	D-2
Q316	F-2
Q317	F-1
Q318	G-3
Q319	G-3
Q320	C-2
VR301	B-2
VR302	A-1
VR303	A-1
VR304	A-1
VR305	A-1
VR306	A-1
VR307	B-1
VR308	C-2
VR309	A-4
VR310	B-3
VR311	B-3
VR312	B-3
VR313	B-3
VR314	B-3
VR315	B-3
VR316	B-3
VR317	B-3
VR318	E-4
VR319	E-2
VR320	F-4
VR321	D-3
VR322	D-3
VR323	F-2
VR324	F-2
VR325	B-4
VR326	B-4
VR327	B-4
VR328	G-2
VR329	F-2
VR330	A-4
C344	D-4
C361	E-4

PROCESS SCHEMATIC DIAGRAM

VR301	CHROMA GAIN	E−8
VR302	AGC	E−8
VR303	OB SHADING	D−7
VR304	DARK SHADING	D−7
VR305	DARK OFFSET	D−7
VR306	UNDER PHASE	E−8
VR307	γ − REF.	G−8
VR308	NTSC PED.	I−8
VR309	SEP. PHASE	C−6
VR310	B − γ3	D−5
VR311	B − γ2	D−5
VR312	B − γ1	D−5
VR313	B − GAIN	D−5
VR314	R − γ3	D−5
VR315	R − γ2	D−5
VR316	R − γ1	D−5
VR317	R − GAIN	D−5
VR318	H.C.	G−6
VR319	R − Y GAIN	G−6
VR320	COLOR GAIN	J−6
VR321	NEGA/POSI PHASE	I−5
VR322	NEGA/POSI PHASE	J−5
VR323	R − CARR. BALL.	H−5
VR324	B − CARR. BALL.	H−5
VR325	IH DL. CCD. BIAS SET.	I−4
VR326	V − EDGE GAIN	J−4
VR327	V − EDGE BALL.	J−3
VR328	AWB SET.	E−3
VR329	AWB SET.	E−3
VR330	SEP. GAIN	D−6
C344	3.58 MHz	F−5
VR361	CARRIER PHASE	H−6

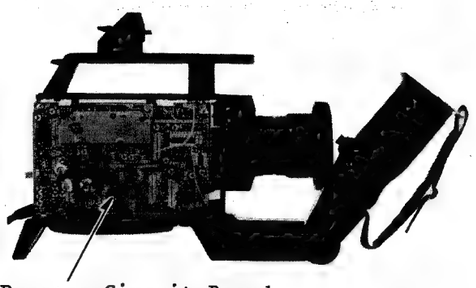

Process Circuit Board

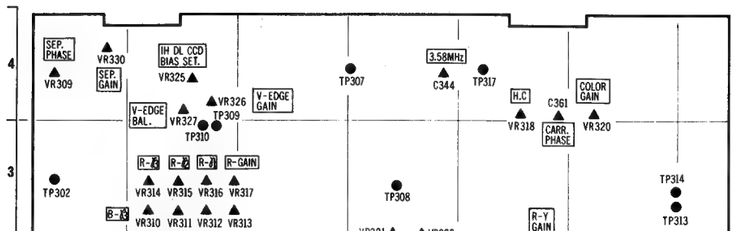

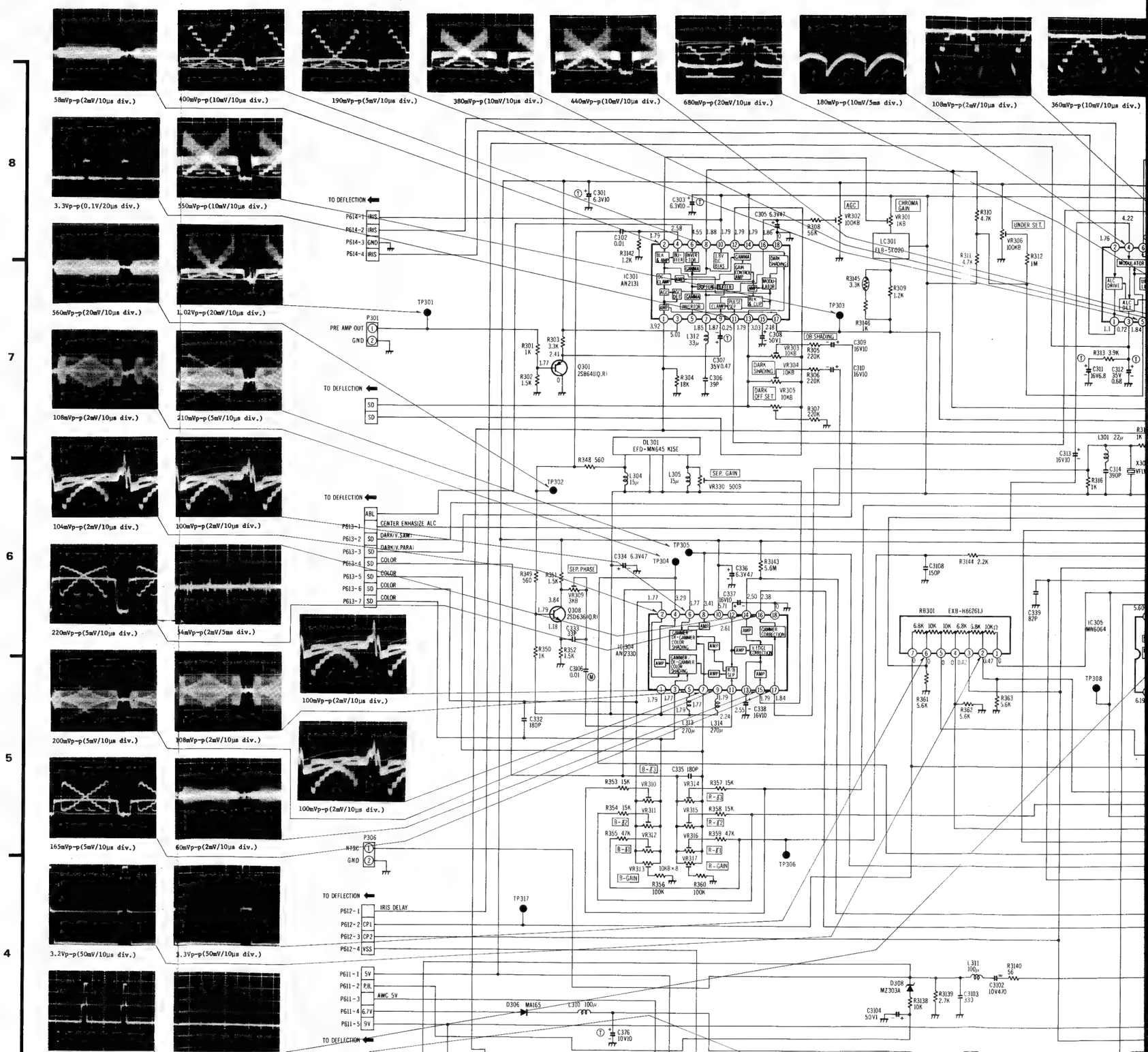

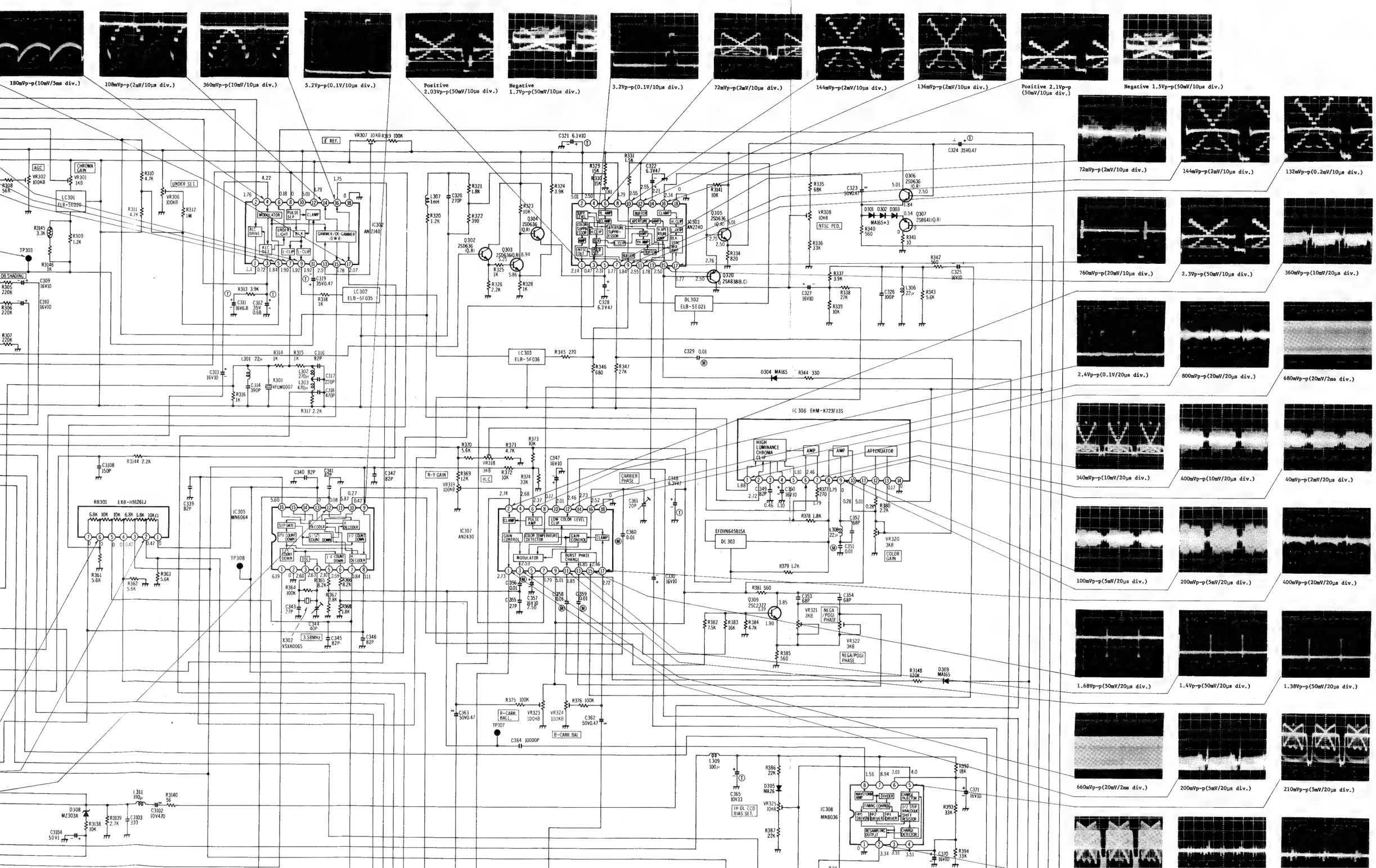
180mVp-p(10mV/5ms div.)
108mVp-p(2mV/10μs div.)
360mVp-p(10mV/10μs div.)
5.2Vp-p(0.1V/10μs div.)
Positive 2.03Vp-p(50mV/10μs div.)
Negative 1.7Vp-p(50mV/10μs div.)
3.2Vp-p(0.1V/10μs div.)
72mVp-p(2mV/10μs div.)
144mVp-p(2mV/10μs div.)
136mVp-p(2mV/10μs div.)
Positive 2.1Vp-p (50mV/10μs div.)
Negative 1.5Vp-p(50mV/10μs div.)
72mVp-p(2mV/10μs div.)
144mVp-p(2mV/10μs div.)
132mVp-p(0.2mV/10μs div.)
760mVp-p(20mV/10μs div.)
2.3Vp-p(50mV/10μs div.)
360mVp-p(10mV/20μs div.)
2.4Vp-p(0.1V/20μs div.)
800mVp-p(20mV/20μs div.)
680mVp-p(20mV/2ms div.)
340mVp-p(10mV/20μs div.)
400mVp-p(10mV/20μs div.)
40mVp-p(2mV/20μs div.)
100mVp-p(5mV/20μs div.)
200mVp-p(5mV/20μs div.)
400mVp-p(20mV/20μs div.)
1.68Vp-p(50mV/20μs div.)
1.4Vp-p(50mV/20μs div.)
1.38Vp-p(50mV/20μs div.)
660mVp-p(20mV/2ms div.)
200mVp-p(5mV/20μs div.)
210mVp-p(5mV/20μs div.)
IC 306 EHM-K723F135
IC302 AN2140
IC303 AN2240
IC305 MN6064
IC307 AN2430
IC308 MN8036
LC301 ELB-5E029
LC302 ELB-5F035
LC303 ELB-5F036
DL302 ELB-5E021
DL303 EFDVN645B15A
RB301 EXB-H86261J
X301 VFLW0007
X302 VSXK0065
3.58MHz
TP303
TP307
TP308
AGC
CHROMA GAIN
UNDER SET
NTSC PED.
NEGA/POGI PHASE
COLOR GAIN
R-Y GAIN
H.C.
CARRIER PHASE
R-CARR. BALL.
B-CARR. BAL
1H DL CCD BIAS SET.
HIGH LUMINANCE CHROMA CLIP
AMP
ATTENUATOR
MODULATOR
PULSE AMP
LOW COLOR LEVEL CLIP
GAIN CONTROL
COLOR TEMPERATURE DETECTOR
BURST PHASE CHANGE
CLAMP
SLIP GATE
DL CODER
1/25 COUNT DOWN
1/2 COUNT DOWN
1/4 COUNT DOWN
OSC
WAVEFORM AMP
DIVIDER
CHARGE INJECTOR
TIMING CONTROL
1/2 STEP ANALOGUE SHIFT RESISTOR
RESAMPLING OUTPUT
CHARGE DETECTOR
D304 MA165
D309 MA165
D301 D302 D303 MA165×3
Q306 2SD636 (Q,R)
Q307 2SB641(Q,R)
Q305 2SD636 (Q,R)
Q304 2SD636 (Q,R)
Q302 2SD636 (Q,R)
Q303 2SD636(Q,R)
Q320 2SA838(B,C)
Q309 2SC2377

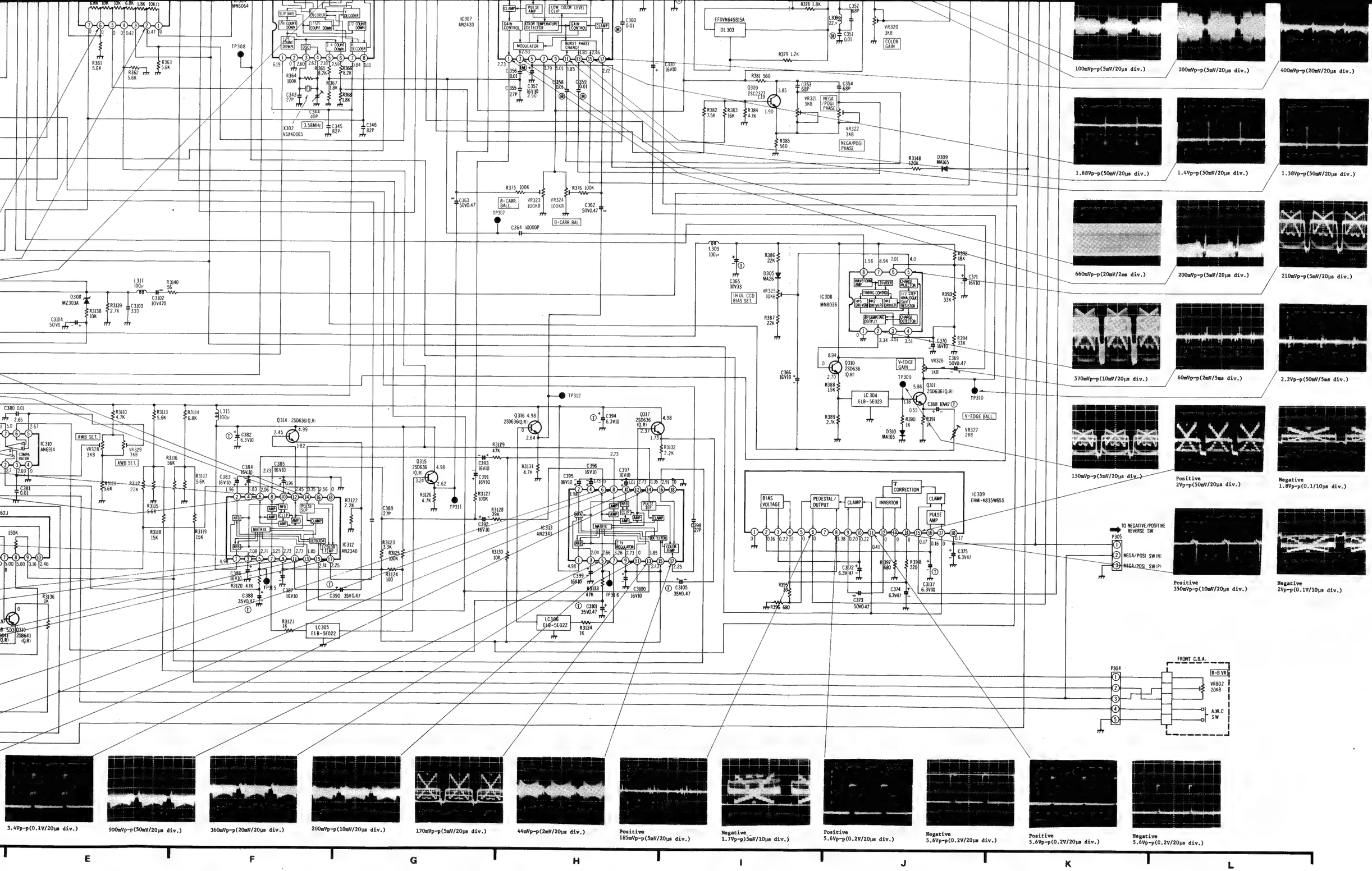
IC307 AN2430
IC308 MN8036
IC309 EHM-X835W65S
IC310 AN6914
IC312 AN2340
IC313 AN2341
IC314 MN6064
X302 VSXK0065
3.58MHz
LC304 ELB-SE023
LC305 ELB-SE022
LC306 ELB-SE022
R-CARR. BALL.
B-CARR. BAL
IH DL CCD BIAS SET.
V-EDGE GAIN
V-EDGE BALL.
COLOR GAIN
NEGA/POGI PHASE
AWB SET.
TO NEGATIVE/POSITIVE REVERSE SW
NEGA/POSI SW(N)
NEGA/POSI SW(P)
FRONT C.B.A.
R-B VR
A.W.C SW
100mVp-p(5mV/20μs div.)
200mVp-p(5mV/20μs div.)
400mVp-p(20mV/20μs div.)
1.68Vp-p(50mV/20μs div.)
1.4Vp-p(50mV/20μs div.)
1.38Vp-p(50mV/20μs div.)
660mVp-p(20mV/2ms div.)
200mVp-p(5mV/20μs div.)
210mVp-p(5mV/20μs div.)
570mVp-p(10mV/20μs div.)
60mVp-p(2mV/5ms div.)
2.2Vp-p(50mV/5ms div.)
150mVp-p(5mV/20μs div.)
Positive 2Vp-p(50mV/20μs div.)
Negative 1.8Vp-p(0.1/10μs div.)
Positive 350mVp-p(10mV/20μs div.)
Negative 2Vp-p(0.1V/10μs div.)
3.4Vp-p(0.1V/20μs div.)
900mVp-p(50mV/20μs div.)
360mVp-p(20mV/20μs div.)
200mVp-p(10mV/20μs div.)
170mVp-p(5mV/20μs div.)
44mVp-p(2mV/20μs div.)
Positive 185mVp-p(5mV/20μs div.)
Negative 1.7Vp-p(5mV/10μs div.)
Positive 5.6Vp-p(0.2V/20μs div.)
Negative 5.6Vp-p(0.2V/20μs div.)
Positive 5.6Vp-p(0.2V/20μs div.)
Negative 5.6Vp-p(0.2V/20μs div.)
E
F
G
H
I
J
K
L

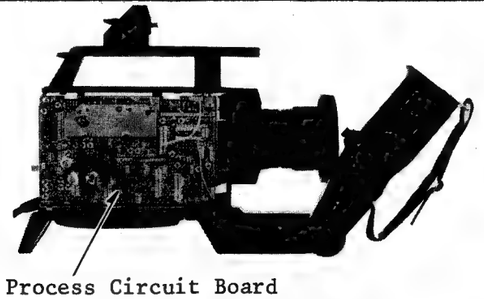

Process Circuit Board

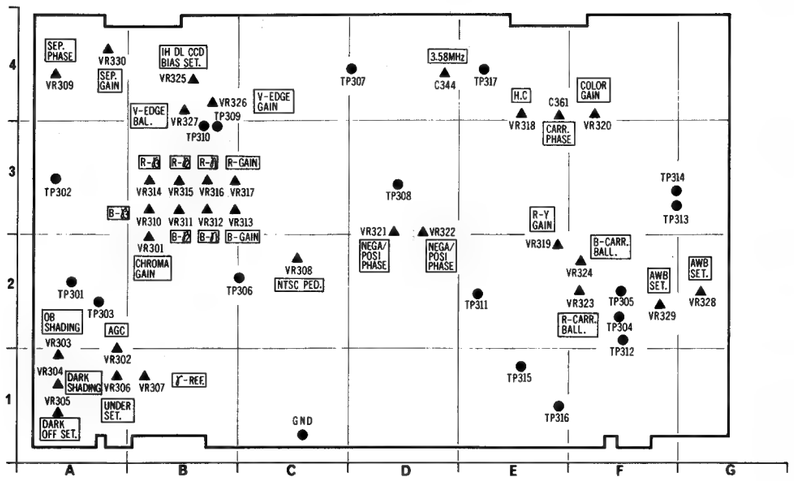

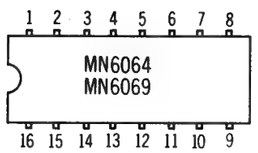

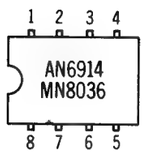

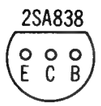

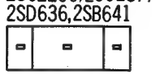

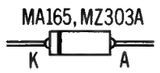

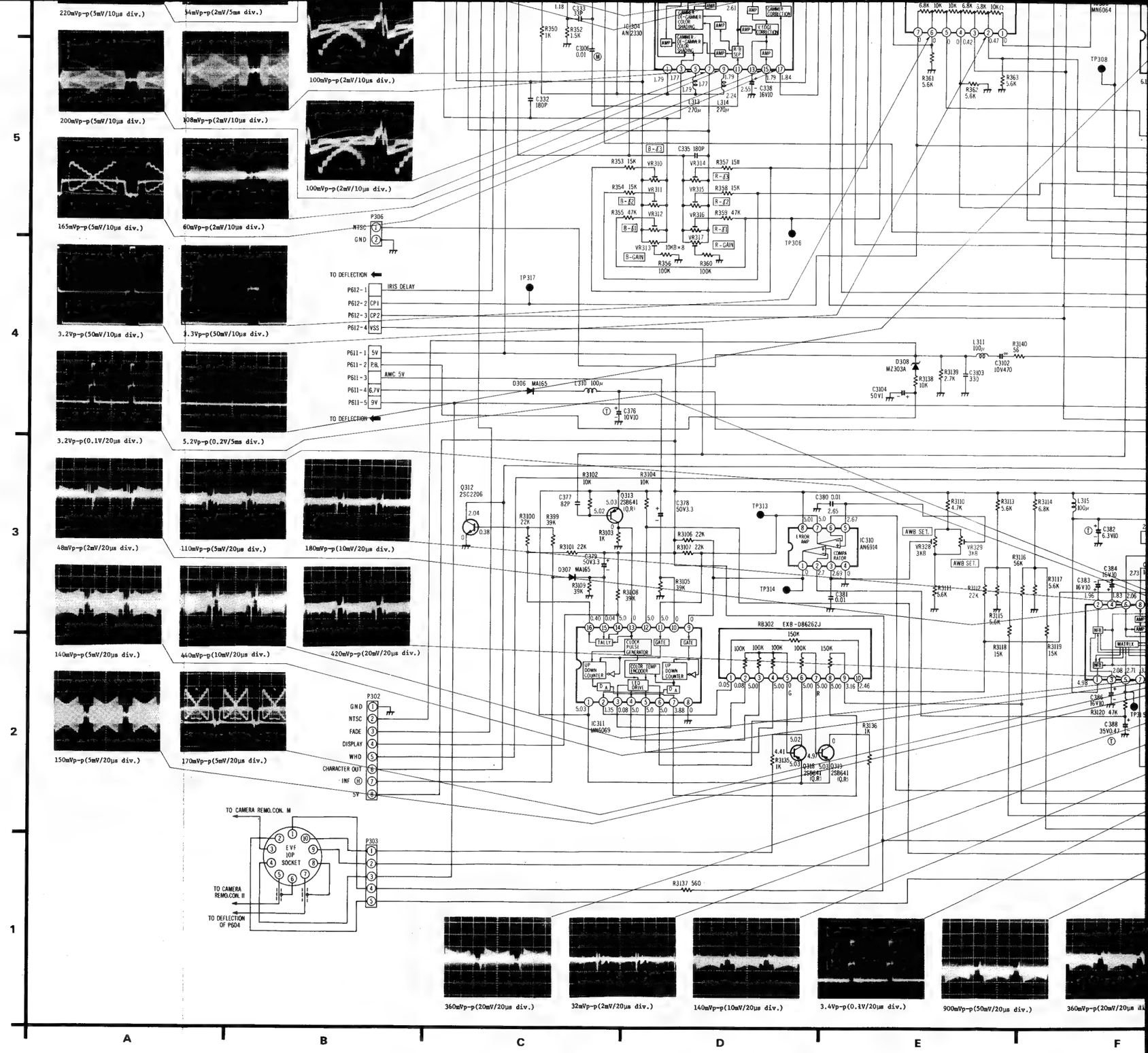

DEFLECTION SCHEMATIC DIAGRAM

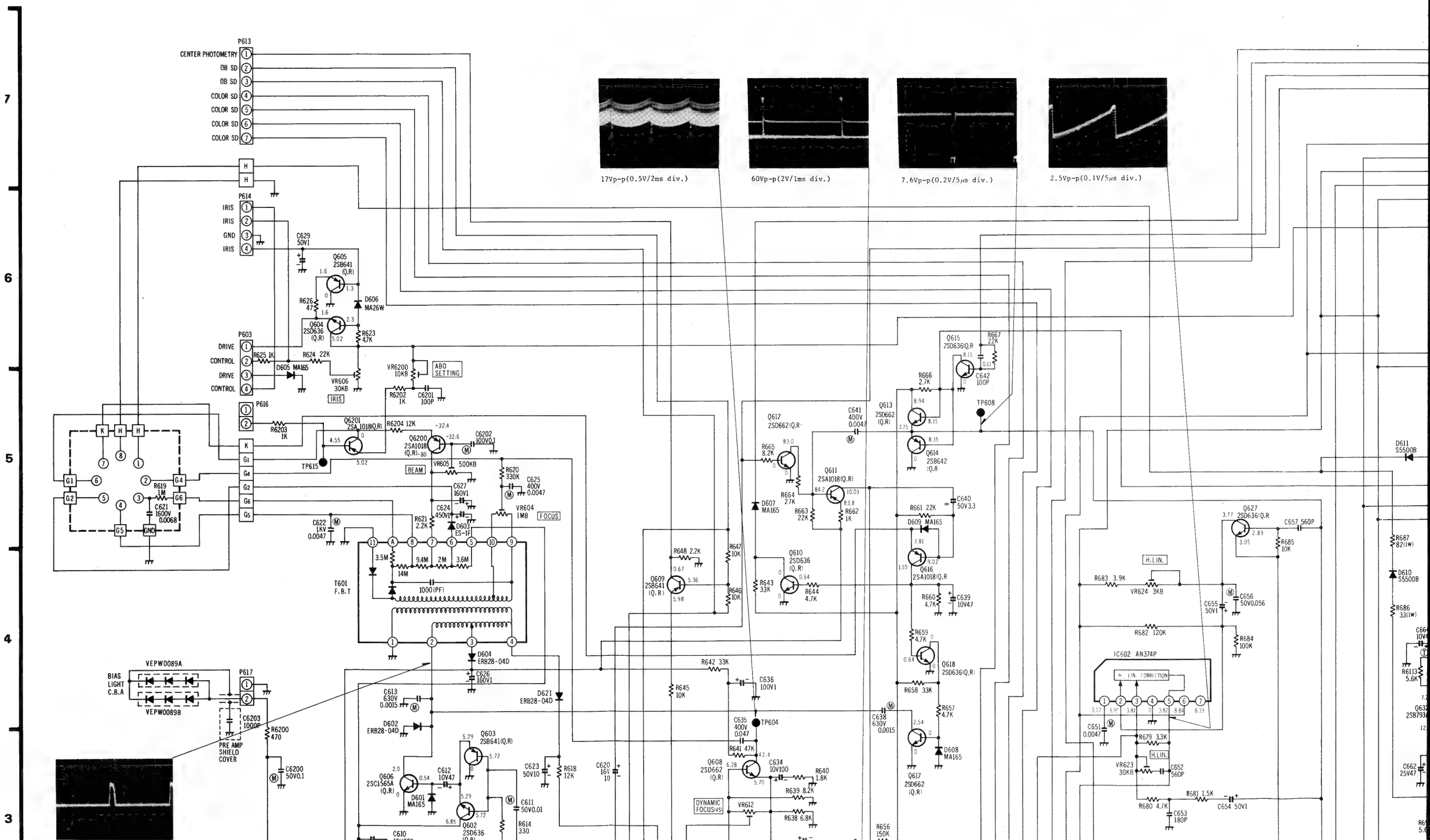

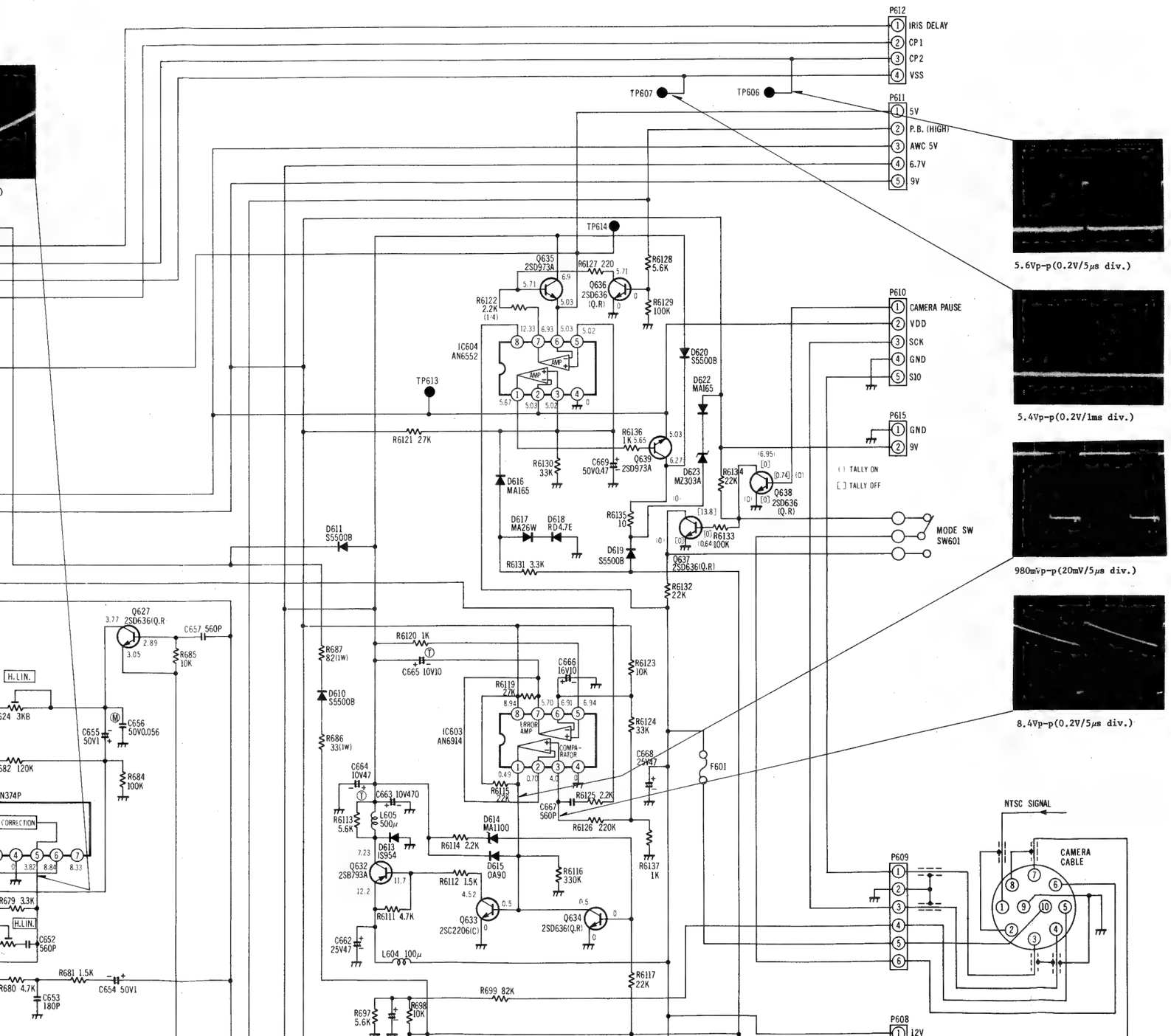

5.6Vp-p(0.2V/5μs div.)

5.4Vp-p(0.2V/1ms div.)

980mVp-p(20mV/5μs div.)

8.4Vp-p(0.2V/5μs div.)

VR601	TARGET CONTROL	B−2
VR602	V. SIZE	C−2
VR603	V−CENTERING	B−2
VR604	FOCUS	C−5
VR605	BEAM	C−5
VR606	IRIS	B−5
VR607	DARK SHADING	D−2
VR608	DARK SHADING	D−2
VR609	DYNAMIC FOCUS	D−2
VR610	DYNAMIC FOCUS	D−3
VR611	DYNAMIC FOCUS	D−3
VR612	DYNAMIC FOCUS	D−3
VR613	COLOR SHADING	F−1
VR614	COLOR SHADING	F−2
VR615	COLOR SHADING	F−2
VR616	COLOR SHADING	F−2
VR617	COLOR SHADING	F−2
VR618	COLOR SHADING	F−2
VR619	COLOR SHADING	F−3
VR620	COLOR SHADING	F−3
VR621	H−CENTERING	G−3
VR622	H. SIZE	G−2
VR623	H. LIN.	G−3
VR624	H. LIN.	G−4
VR625	9V ADJ.	H−1
VR6200	ABO SET.	C−5

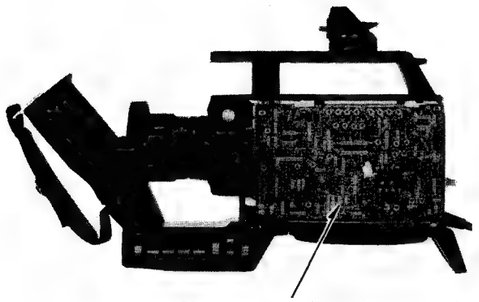

Deflection Circuit Board

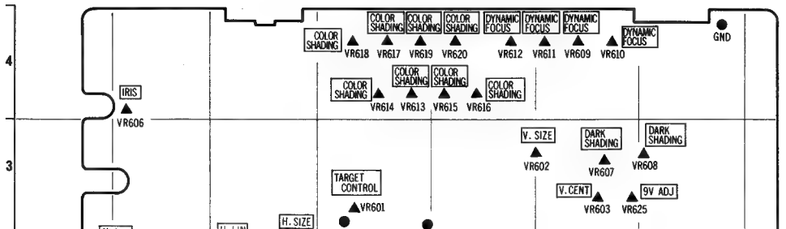

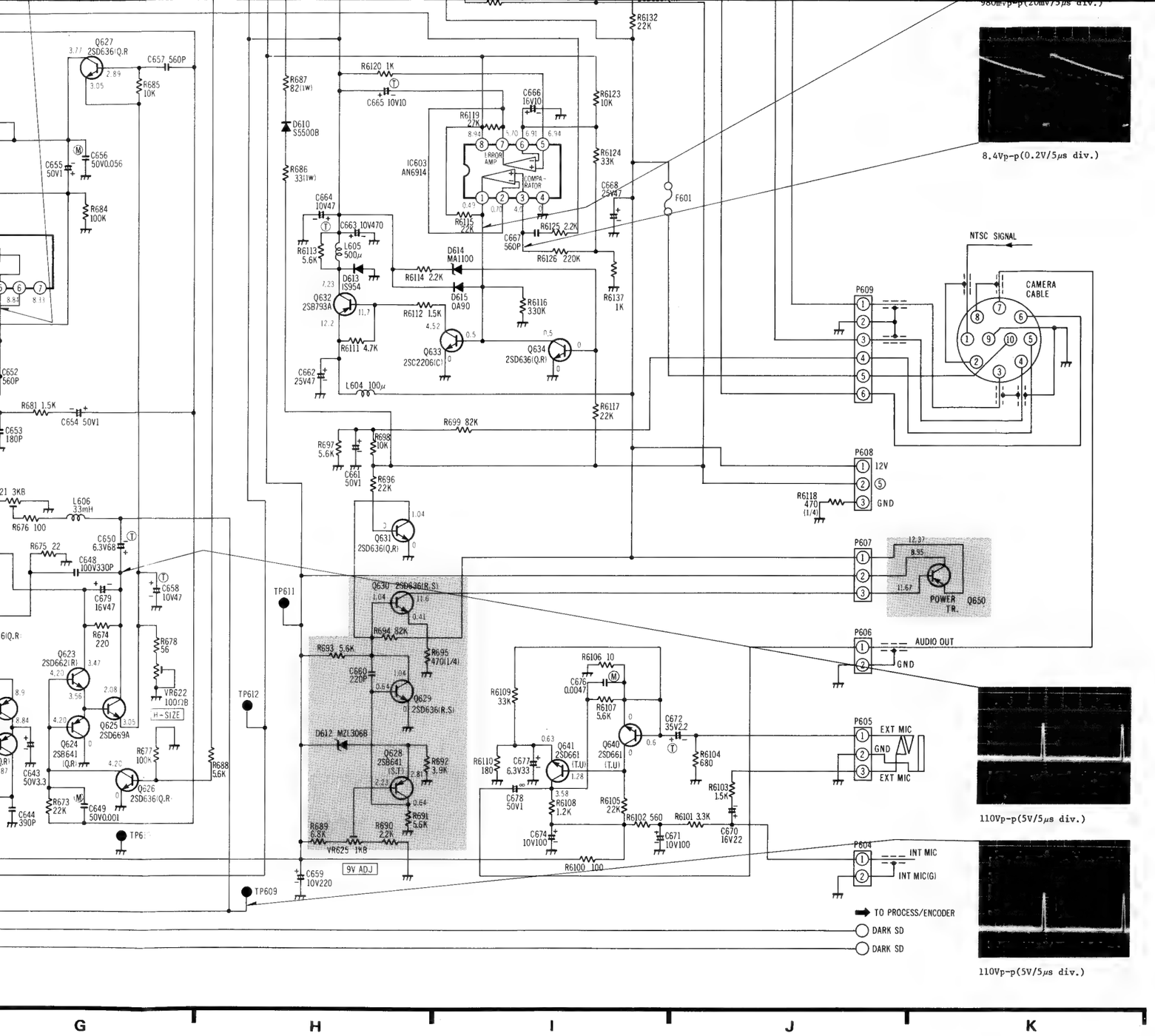

980mVp-p(20mV/5μs div.)

8.4Vp-p(0.2V/5μs div.)

110Vp-p(5V/5μs div.)

110Vp-p(5V/5μs div.)

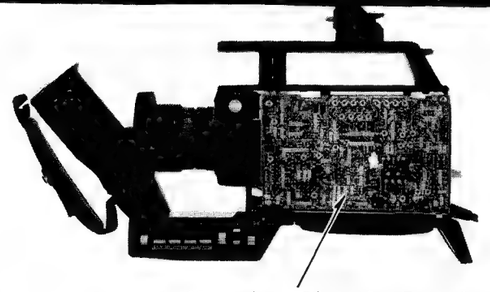

Deflection Circuit Board

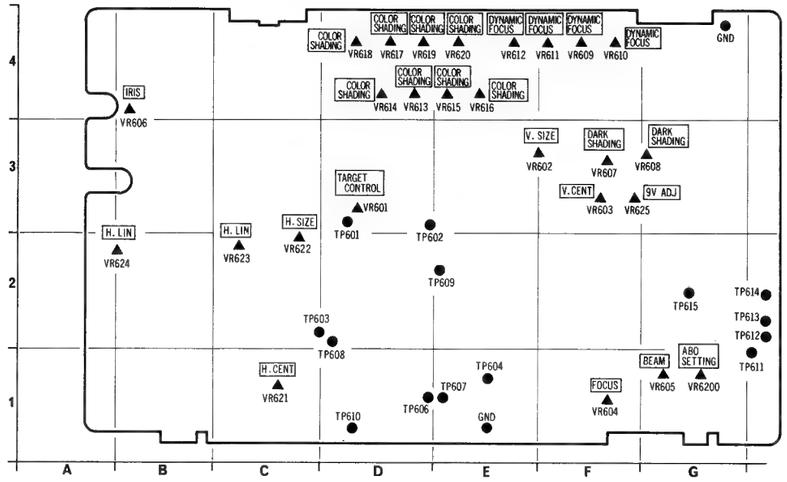

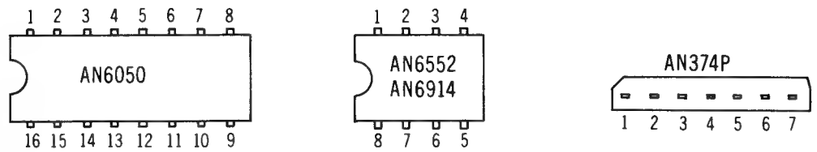

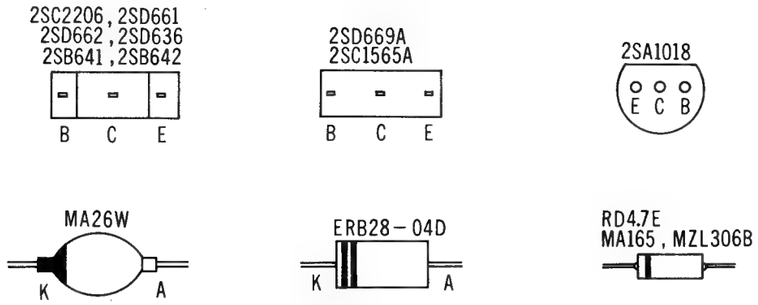

PRODUCT SAFETY NOTE

The shaded area on this schematic diagram incorporates special features important for protection from X-Radiation, fire and electrical shock hazards when servicing it is essential that only manufacturer's specified parts be used for the critical components in the shaded areas of the schematic.

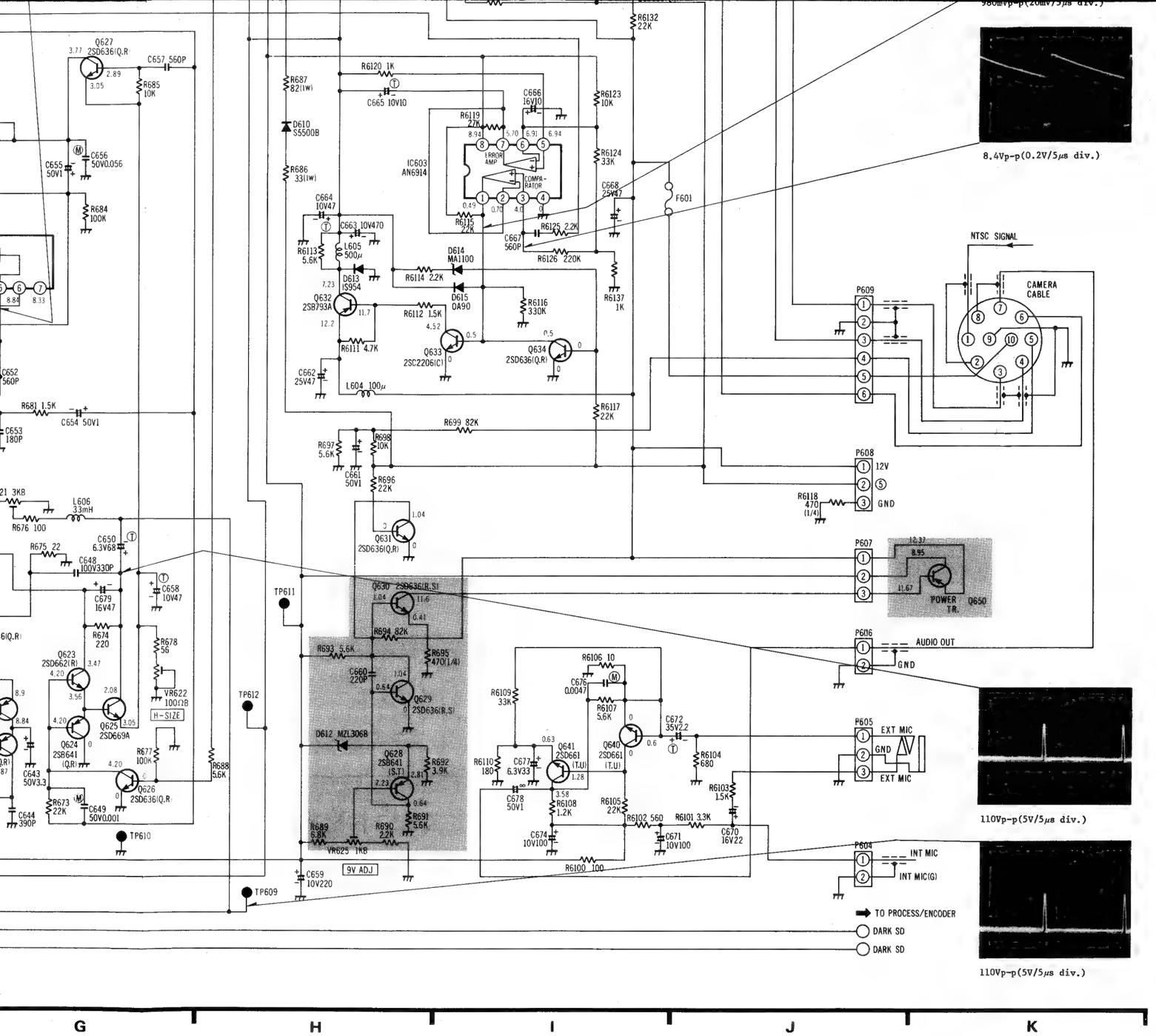

980mVp-p(20mV/5μs div.)

8.4Vp-p(0.2V/5μs div.)

110Vp-p(5V/5μs div.)

110Vp-p(5V/5μs div.)

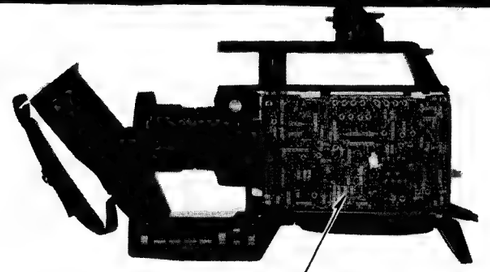

Deflection Circuit Board

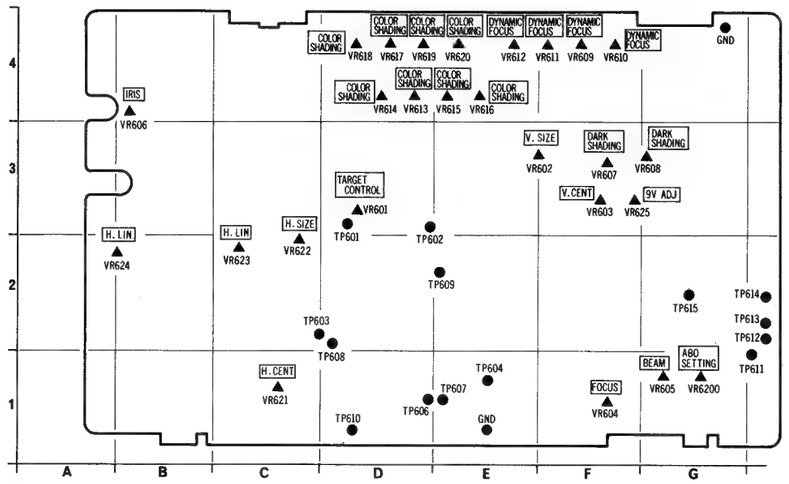

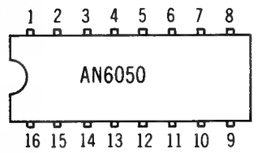

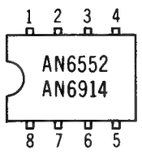

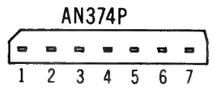

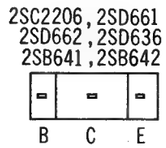

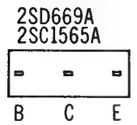

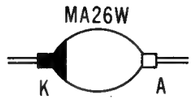

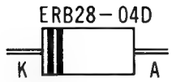

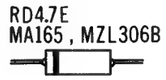

PRODUCT SAFETY NOTE

The shaded area on this schematic diagram incorporates special features important for protection from X-Radiation, fire and electrical shock hazards when servicing it is essential that only manufacturer's specified parts be used for the critical components in the shaded areas of the schematic.

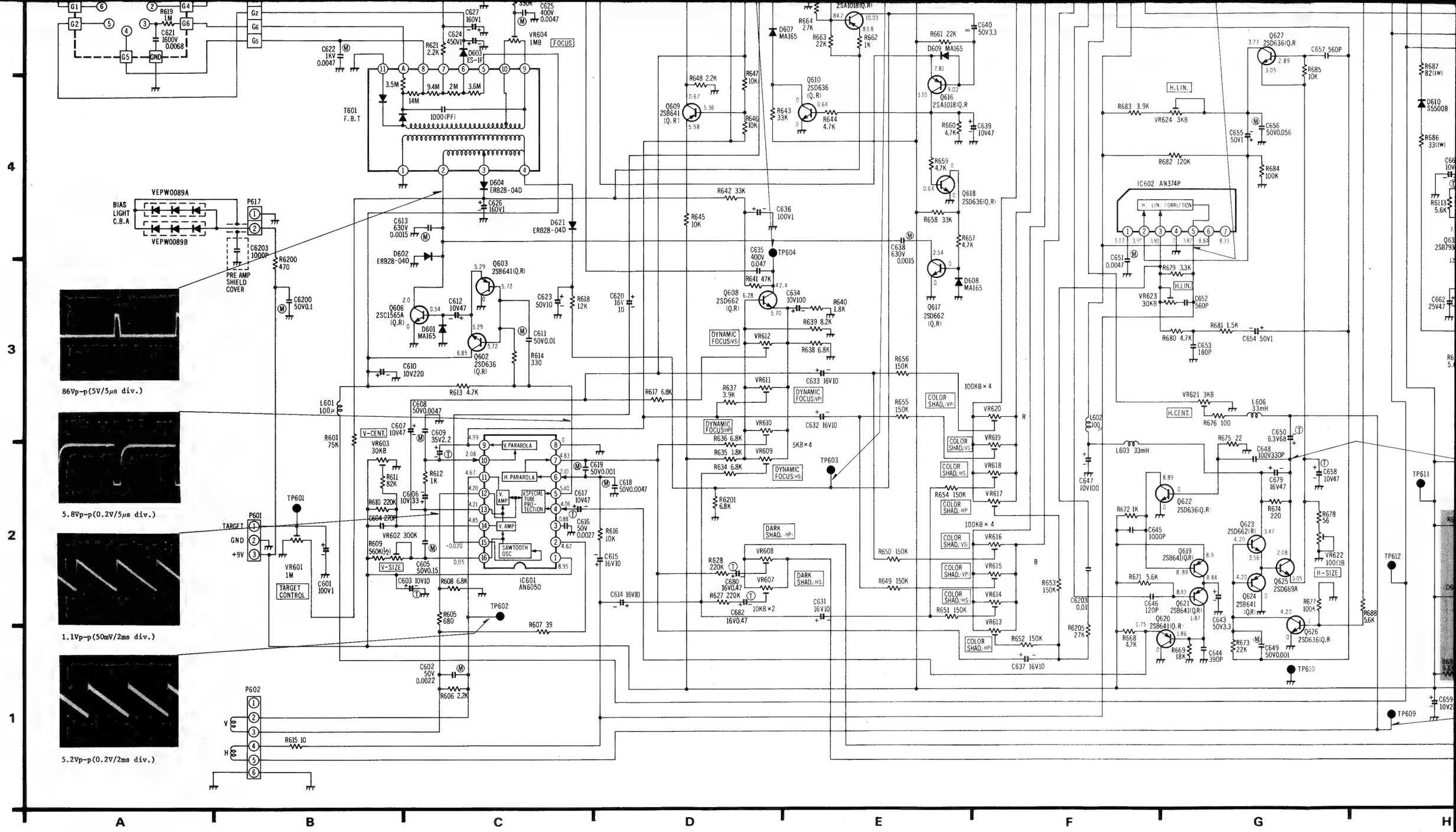
86Vp-p(5V/5μs div.)
5.8Vp-p(0.2V/5μs div.)
1.1Vp-p(50mV/2ms div.)
5.2Vp-p(0.2V/2ms div.)
VEPW0089A
VEPW0089B
BIAS LIGHT C.B.A
PRE AMP SHIELD COVER
P617
P601
P602
TARGET
GND
+9V
TARGET CONTROL
V-CENT.
V-SIZE
V.PARABOLA
H.PARAROLA
V.AMP
V.SPECIAL TUBE PRO-TECTION
SAWTOOTH OSC
IC601 AN6050
T601 F.B.T
FOCUS
DYNAMIC FOCUS(VS)
DYNAMIC FOCUS(VP)
DYNAMIC FOCUS(HP)
DYNAMIC FOCUS(HS)
DARK SHAD.(HP)
DARK SHAD.(HS)
COLOR SHAD.(VP)
COLOR SHAD.(VS)
COLOR SHAD.(HS)
COLOR SHAD.(HP)
H.LIN.
H.CENT.
H-SIZE
IC602 AN374P
H. LIN. CORRECTION
TP601
TP602
TP603
TP604
TP609
TP610
TP611
TP612
A
B
C
D
E
F
G
H
1
2
3
4

DEFLECTION CIRCUIT BOARD (VEPW0108A)

IC601	E-3
IC602	B-3
IC603	B-3
IC604	G-4
Q602	F-3
Q603	F-3
Q604	B-3
Q605	B-3
Q606	E-2
Q608	E-4
Q609	F-4
Q610	E-2
Q611	D-1
Q612	D-1
Q613	D-1
Q614	D-1
Q615	D-1
Q616	D-2
Q617	E-2
Q618	D-2
Q619	D-3
Q620	D-3
Q621	D-3
Q622	C-3
Q623	C-2
Q624	C-2
Q625	C-2
Q626	B-2
Q627	B-3
Q628	G-3
Q629	G-3
Q630	G-3
Q631	F-3
Q632	C-4
Q633	C-3
Q634	C-3
Q635	G-4
Q636	G-4
Q637	C-1
Q638	D-1
Q639	G-4
Q640	B-2
Q641	B-2
Q6200	G-2
Q6201	G-2
VR601	D-3
VR602	E-3
VR603	F-3
VR604	F-1
VR605	G-1
VR606	B-4
VR607	F-3
VR608	G-3
VR609	F-4
VR610	F-4
VR611	F-4
VR612	E-4
VR613	D-4
VR614	D-4
VR615	E-4
VR616	E-4
VR617	D-4
VR618	D-4
VR619	D-4
VR620	E-4
VR621	C-1
VR622	C-2
VR623	C-2
VR624	A-2
VR625	F-3
VR6200	G-1

P601	
1	TARGET
2	GND
3	+9V

P602	
1	THERMISTOR
2	V COIL
3	V COIL
4	H COIL
5	H COIL
6	GND

P603	
1	DRIVE
2	CONTROL
3	DRIVE
4	CONTROL

P604	
1	INT MIC
2	INT MIC

P605	
1	EXT MIC
2	GND
3	EXT MIC

P606	
1	AUDIO OUT
2	GND

P607	
1	Q650 (E)
2	Q650 (C)
3	Q650 (B)

P608	
1	12V
2	(5)
3	GND

P609	
1	REMO. CON.
2	GND
3	REMO. CON.
4	STANDBY
5	+12V
6	PAUSE SIGNAL

P610	
1	CAMERA PAUSE
2	VDD
3	SCK
4	GND
5	S10

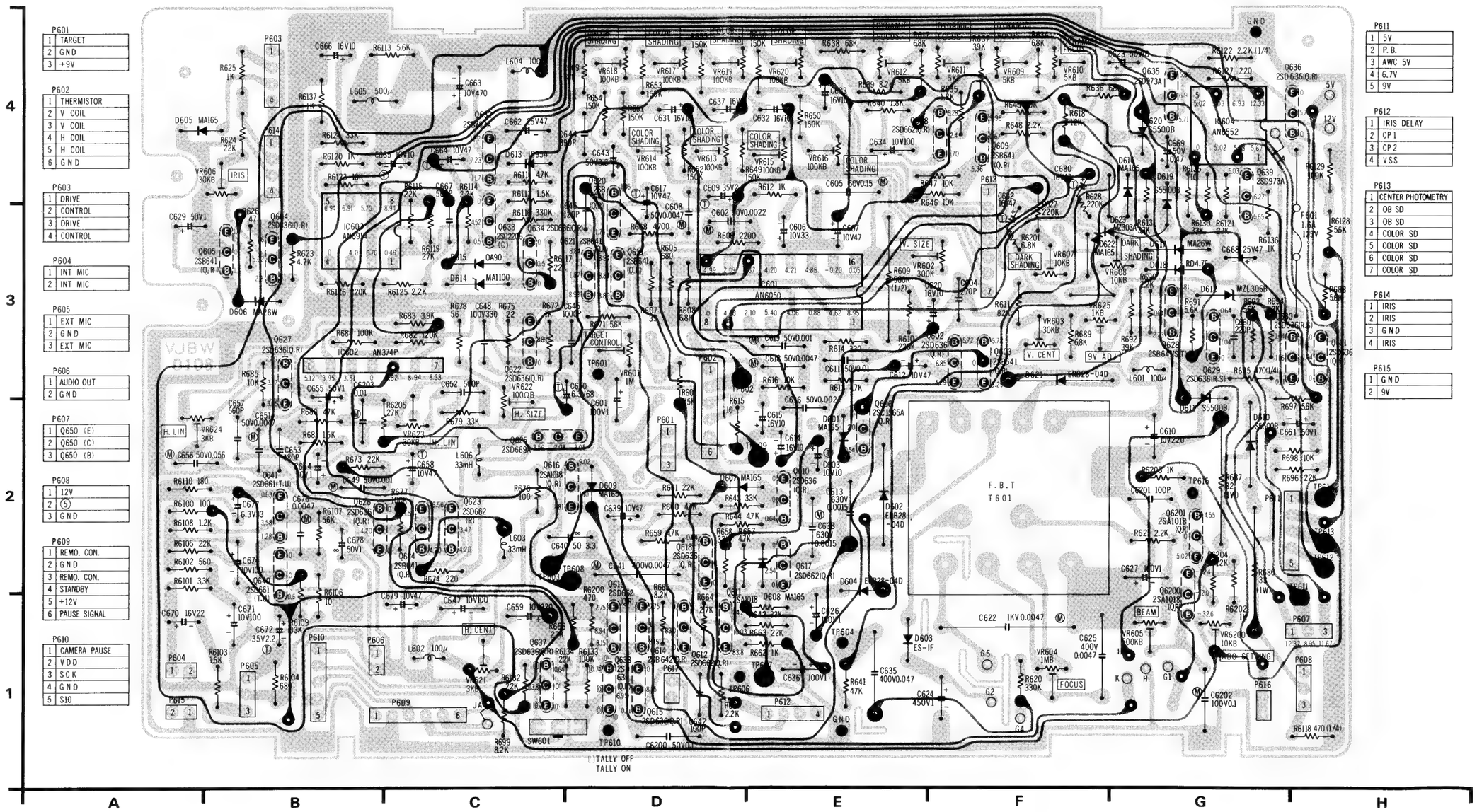

P611	
1	5V
2	P.B.
3	AWC 5V
4	6.7V
5	9V

P612	
1	IRIS DELAY
2	CP I
3	CP 2
4	VSS

P613	
1	CENTER PHOTOMETRY
2	OB SD
3	OB SD
4	COLOR SD
5	COLOR SD
6	COLOR SD
7	COLOR SD

P614	
1	IRIS
2	IRIS
3	GND
4	IRIS

P615	
1	GND
2	9V

REAR SIDE SCHEMATIC DIAGRAM

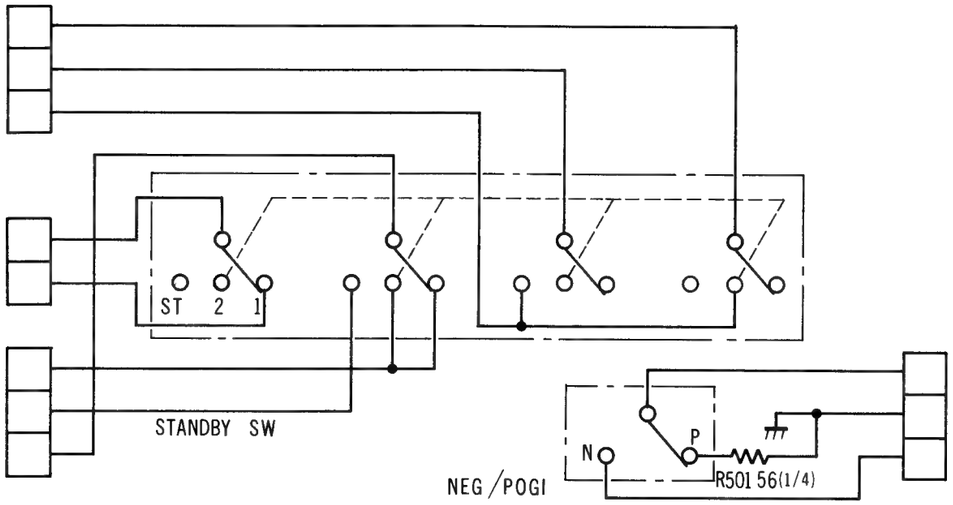

REAR SIDE CIRCUIT BOARD (VEPW0110)

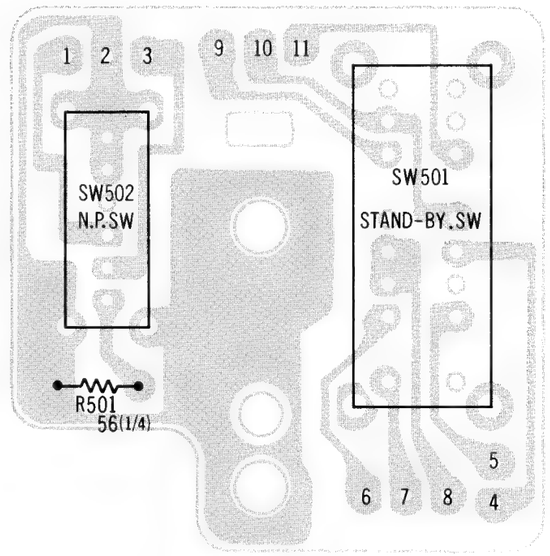

SPECIAL TUBE SOCKET CIRCUIT BOARD (VEPW0124)

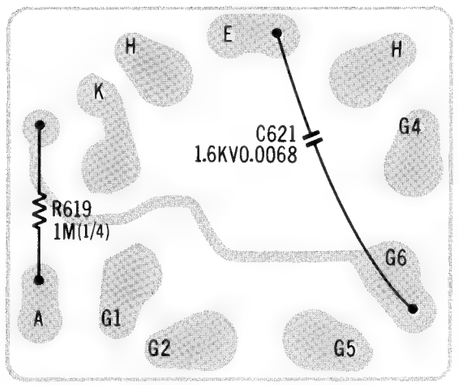

FRONT CIRCUIT BOARD (VEPW0113)

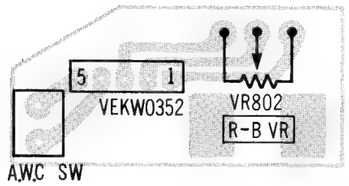

REMOTE CONTROL SW CIRCUIT BOARD (VEPW0111)

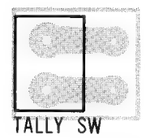

POWER ZOOM SW SCHEMATIC DIAGRAM

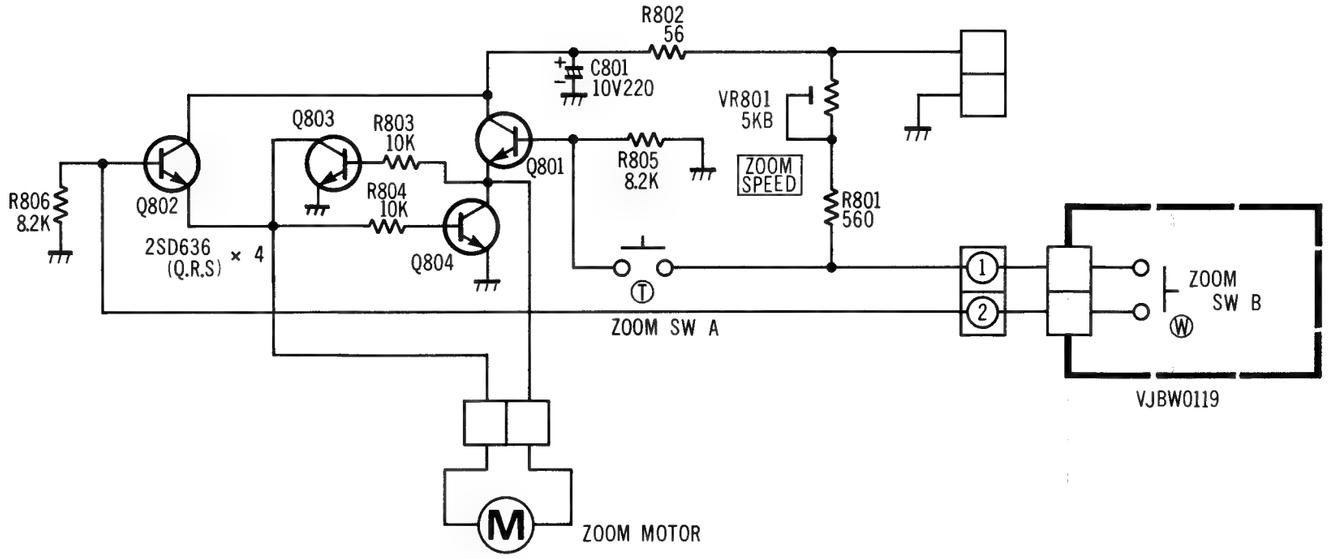

POWER ZOOM SW (B) CIRCUIT BOARD (VEPW0119)

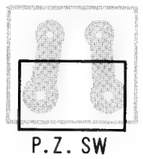

POWER ZOOM SW (A) CIRCUIT BOARD (VEPW0112)

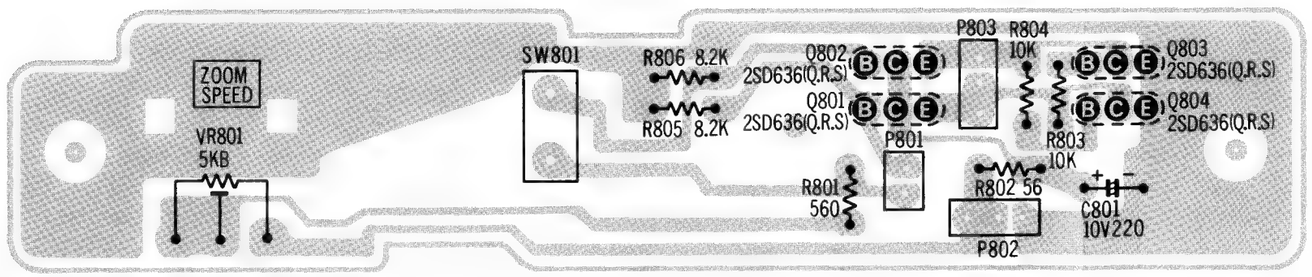

BIAS LIGHT CIRCUIT BOARD

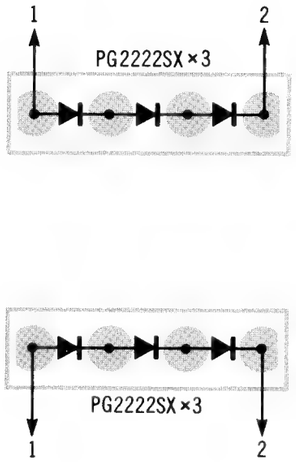

CAMERA REMOTE CONTROL (S) SCHEMATIC DIAGRAM

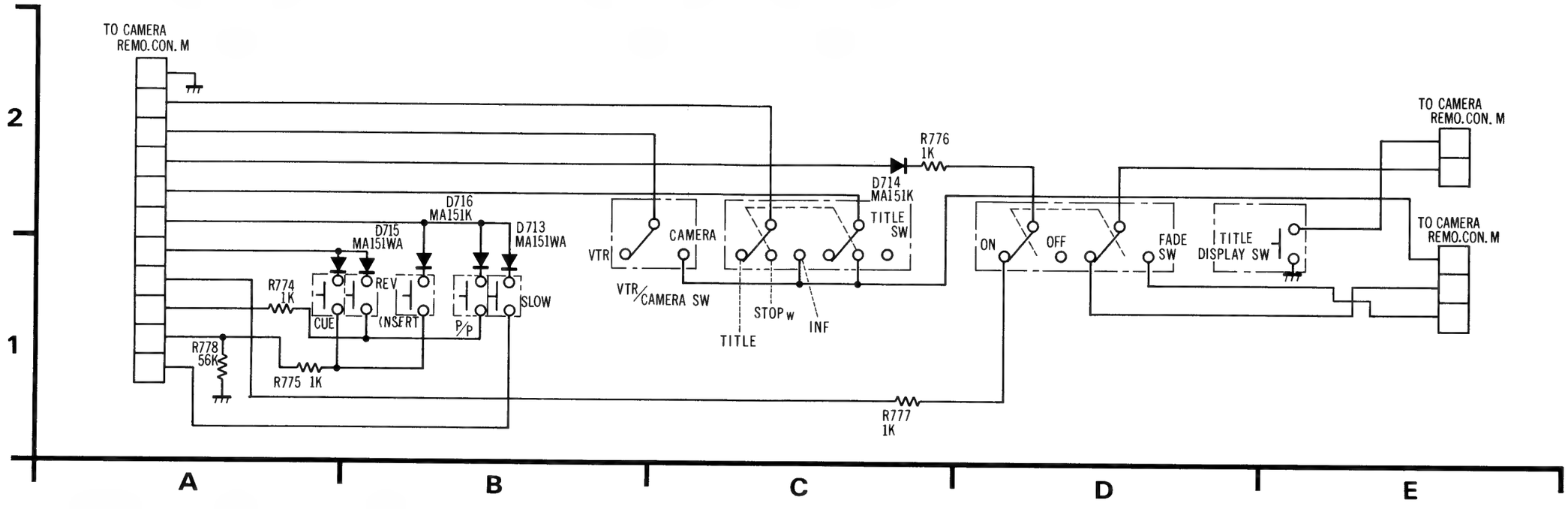

CAMERA REMOTE CONTROL (S) CIRCUIT BOARD (VEPW0116)

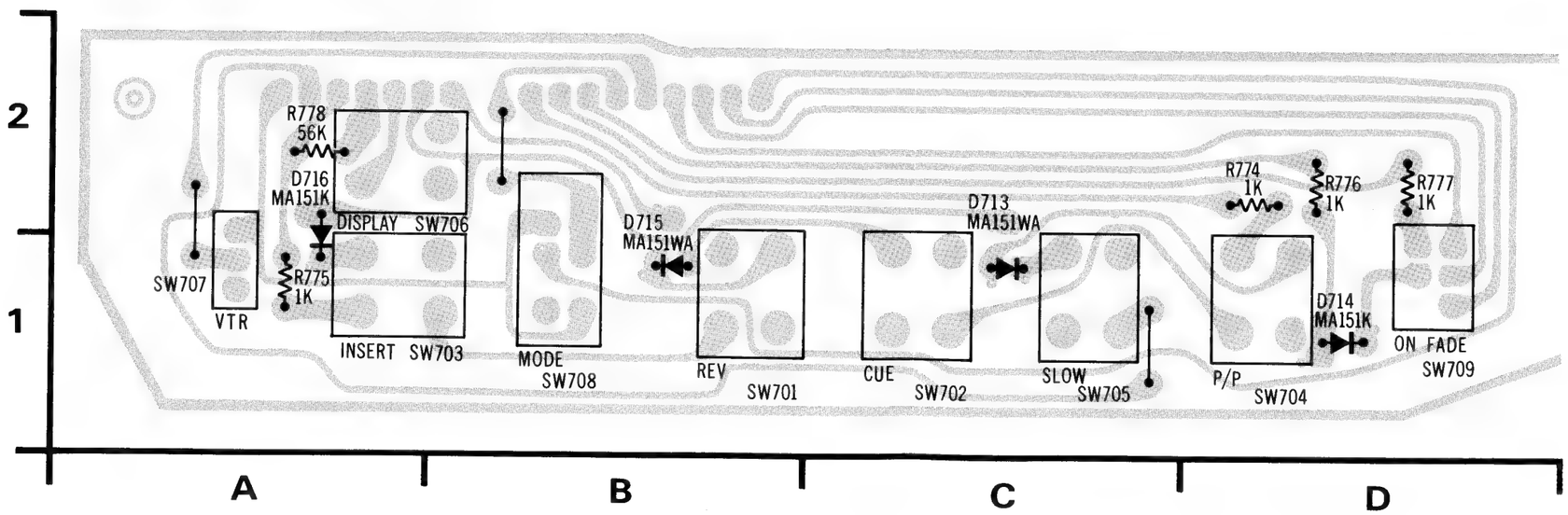

CAMERA REMOTE CONTROL (H) SCHEMATIC DIAGRAM

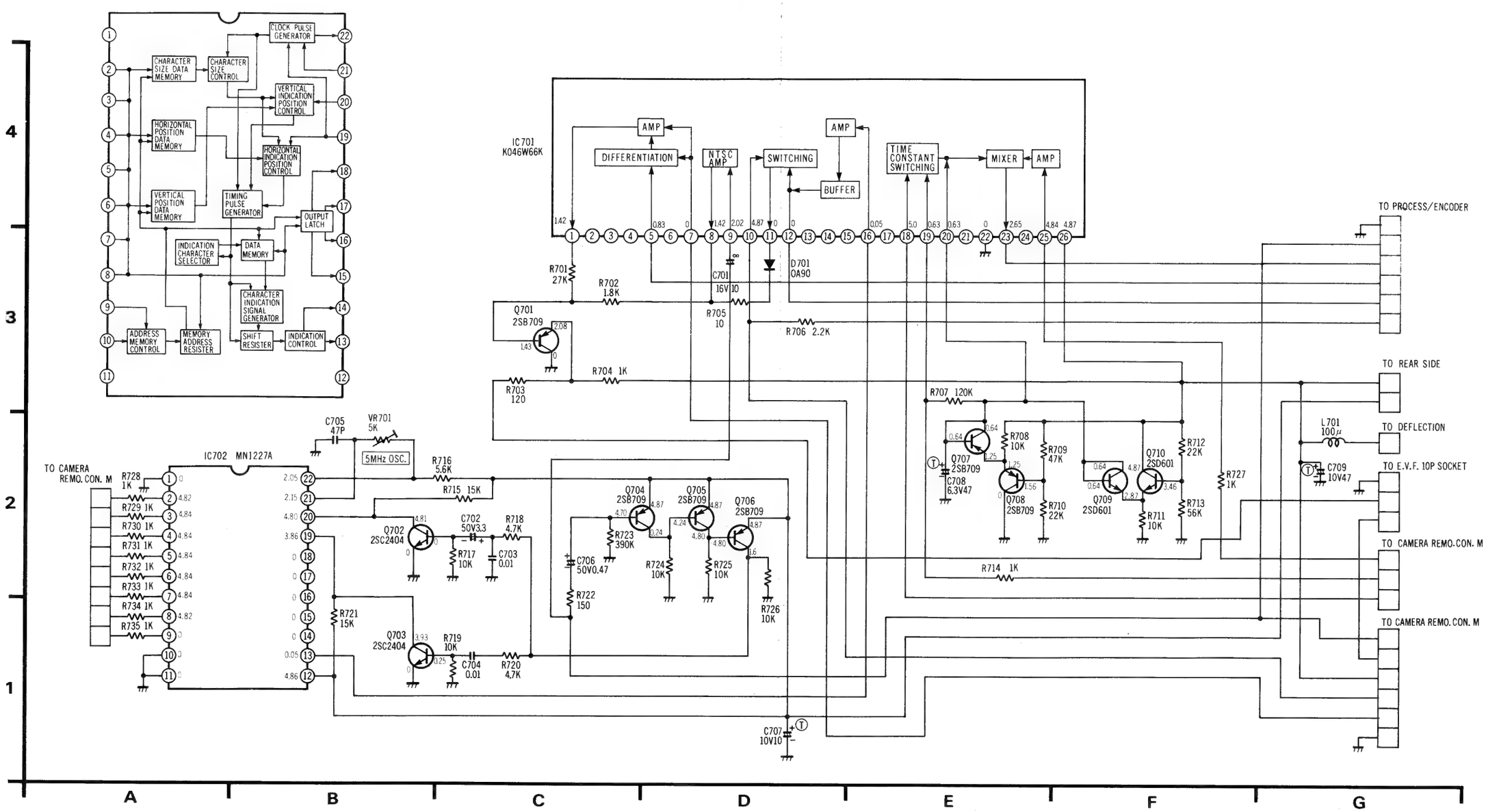

TIC DIAGRAM

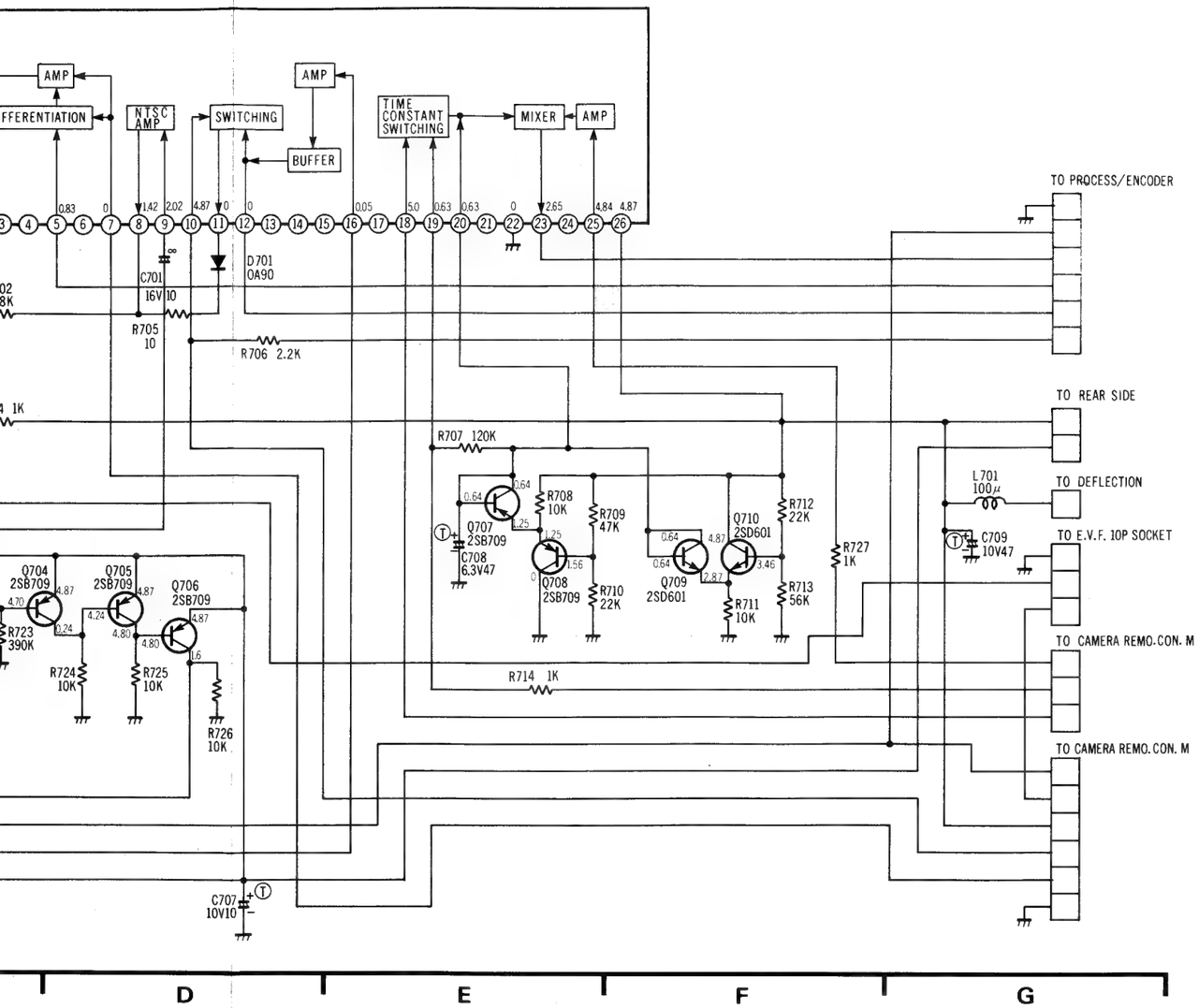

CAMERA REMOTE CONTROL (H) CIRCUIT BOARD (VEPW0114)

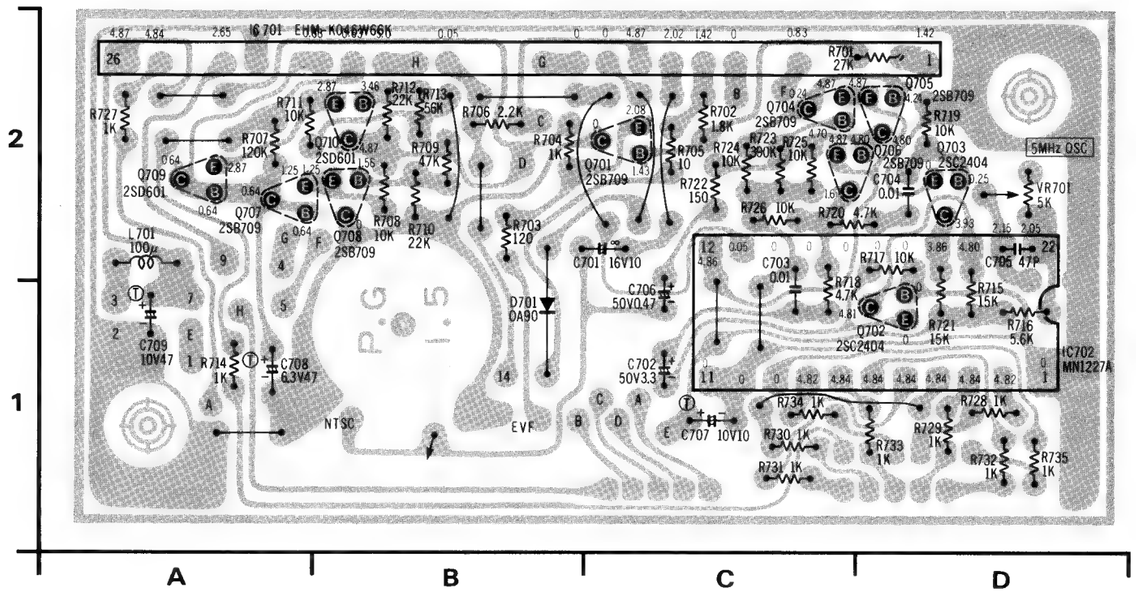

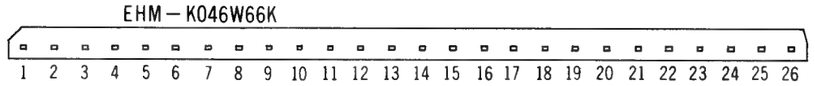

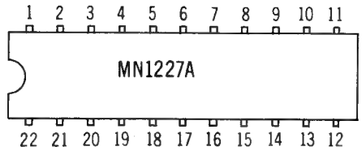

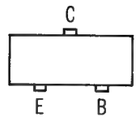

2SC2404, 2SC2295
2SB709, 2SB709A
2SD601, 2SD601A

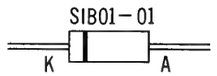

CAMERA REMOTE CONTROL (M) SCHEMATIC DIAGRAM

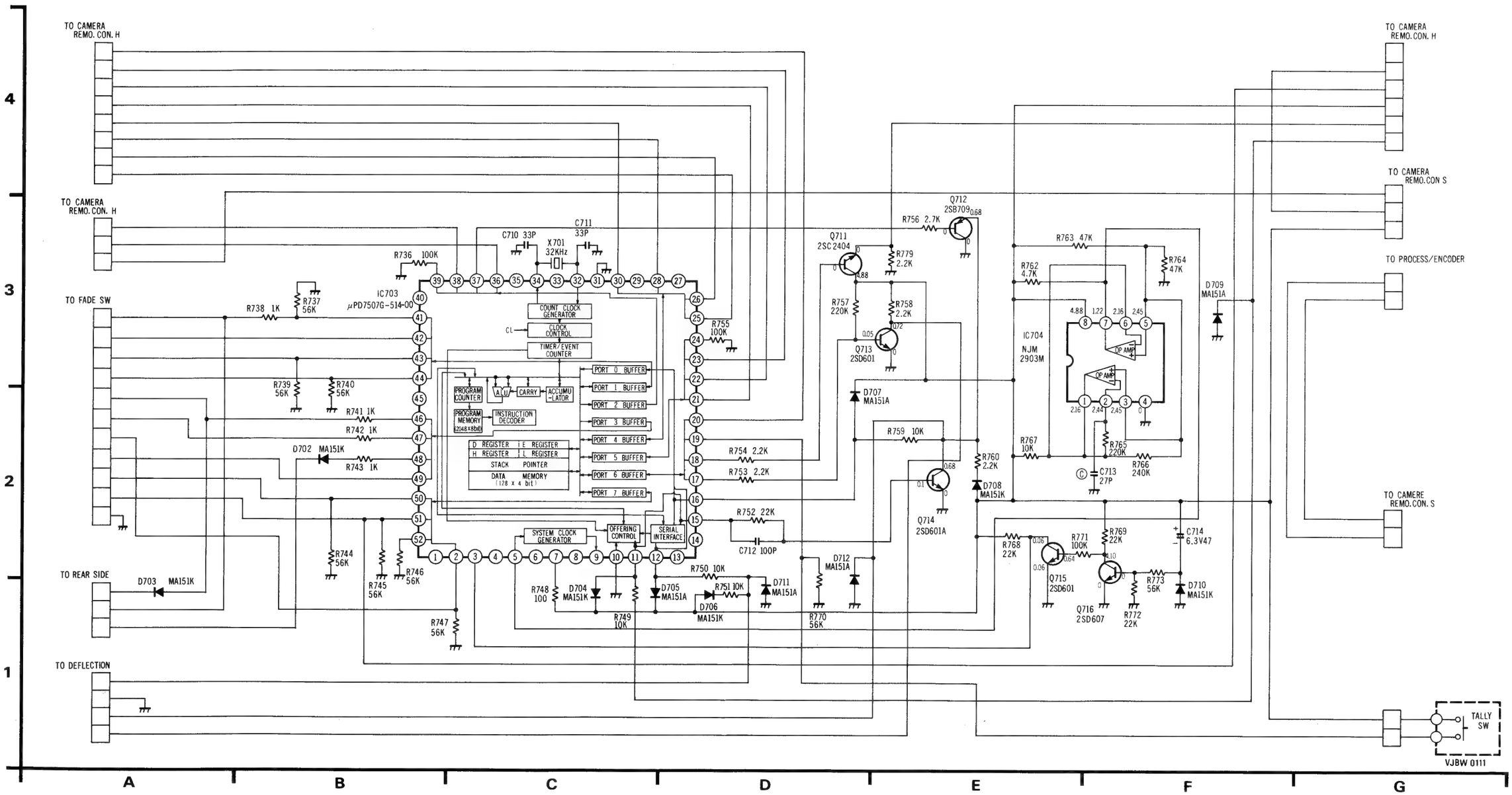

PIN NO.	MODE
1	0.3
2	0
3	0
4	0.3
5	1.17
6	0.45
7	4.85
8	—
9	—
10	0
11	0
12	−0.03
13	—
14	—
15	0.16

IC DIAGRAM

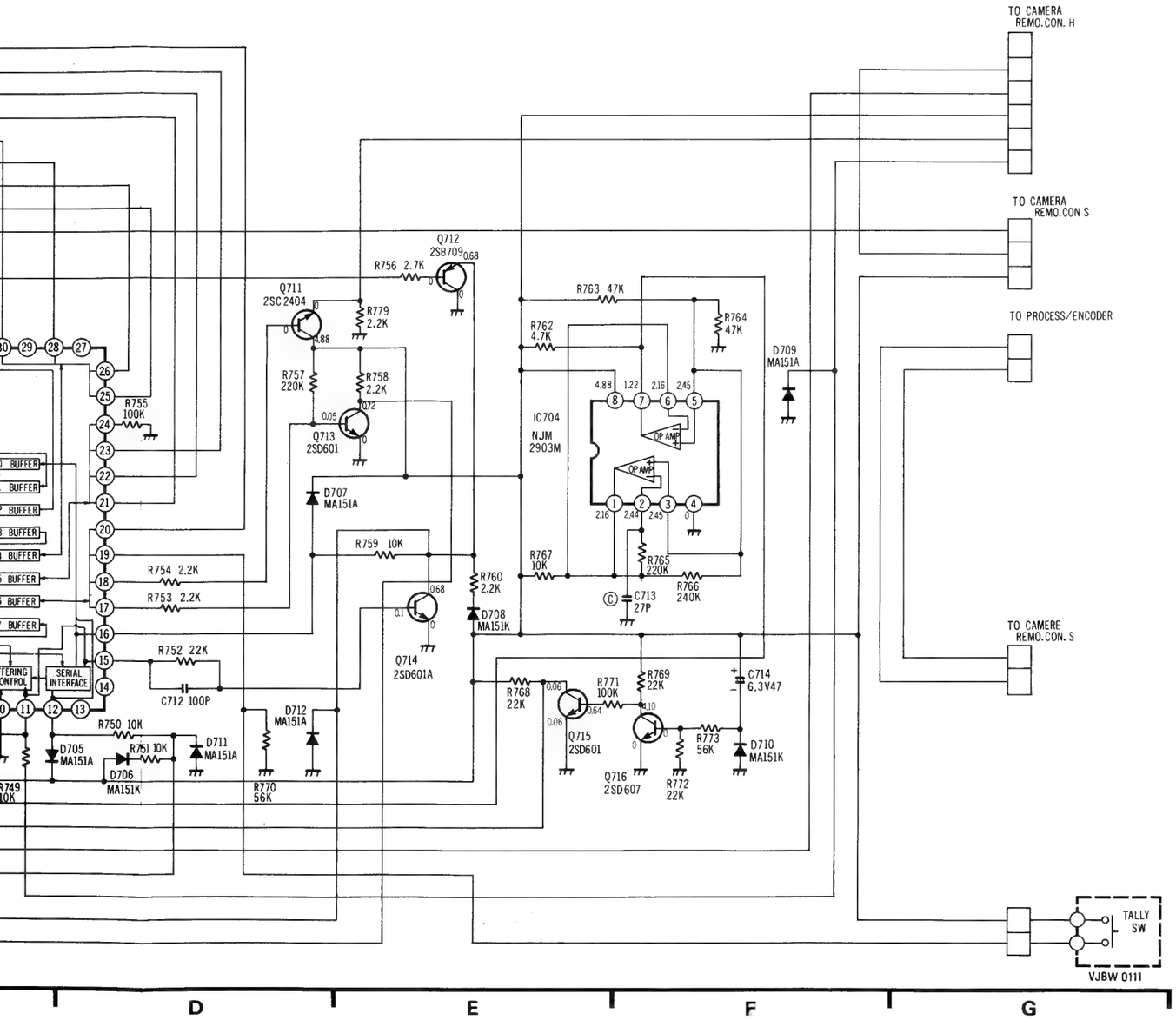

CAMERA REMOTE CONTROL (M) CIRCUIT BOARD (VEPW0115)

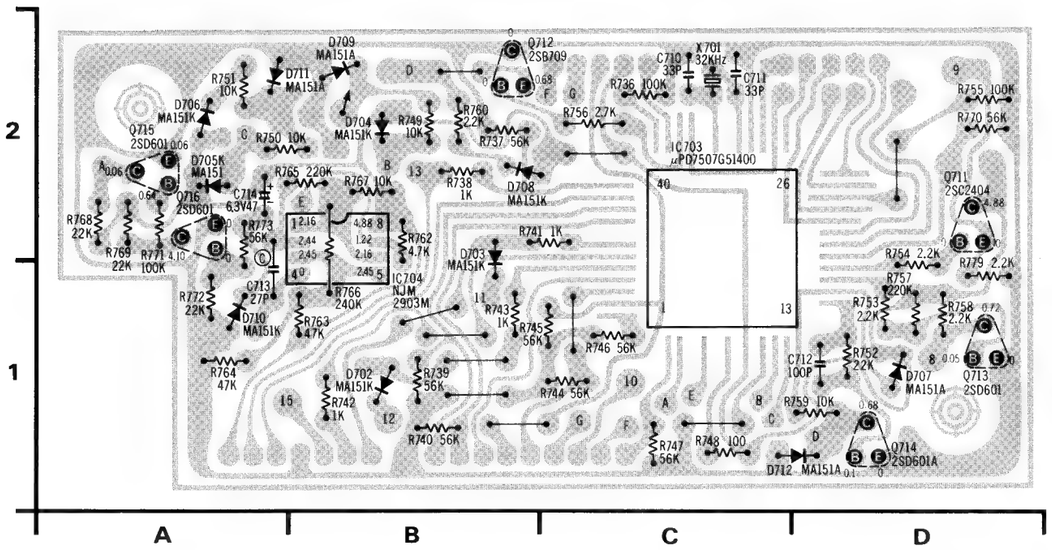

PIN NO.	IC703 MODE	IC703 STOP WATCH	IC703 INFOR-MATION	PIN NO.	IC703 MODE	IC703 STOP WATCH	IC703 INFOR-MATION	PIN NO.	IC703 MODE	IC703 STOP WATCH	IC703 INFOR-MATION	PIN NO.	IC703 MODE	IC703 STOP WATCH	IC703 INFOR-MATION
1	0.3	0.1	0.29	16	0.68	0.68	0.68	31	0	0	0	46	4.68	4.70	4.67
2	0	4.87	0.04	17	0	0	0	32	2.30	2.30	2.30	47	4.67	4.67	4.67
3	0	0	0	18	0	0	0	33	—	—	—	48	0	0	0
4	0.3	0	0	19	0	0	0	34	2.28	2.28	2.28	49	0.15	0.15	0.15
5	1.17	1.17	1.17	20	0	0.2	0	35	—	—	—	50	0	0	0
6	0.45	0.15	0.45	21	0	0.2	4.84	36	0	0	0	51	0.18	0.18	4.87
7	4.85	4.85	4.85	22	0	4.55	4.84	37	0	0	0	52	0	0	0
8	—	—	—	23	0	0.14	4.82	38	4.85	4.85	4.85				
9	—	—	—	24	0	0.11	4.81	39	4.84	4.84	4.84				
10	0	0	0	25	0	0.12	4.82	40	—	—	—				
11	0	0	0	26	0	0.3	4.14	41	0	0	0				
12	−0.03	−0.03	−0.03	27	—	—	—	42	0	0	0				
13	—	—	—	28	0	0.25	4.84	43	0	0	0				
14	—	—	—	29	—	—	—	44	0	0	0				
15	0.16	0.16	0.16	30	0	0.3	4.84	45	0.12	0.10	0.10				

ELECTRONIC VIEWFINDER SCHEMATIC DIAGRAM

PRODUCT SAFETY NOTE

The shaded area on this schematic diagram incorporates spec
for protection from X-Radiation, fire and electrical shock haz
is essential that only manufacturer's specified parts be used f
nents in the shaded areas of the schematic.

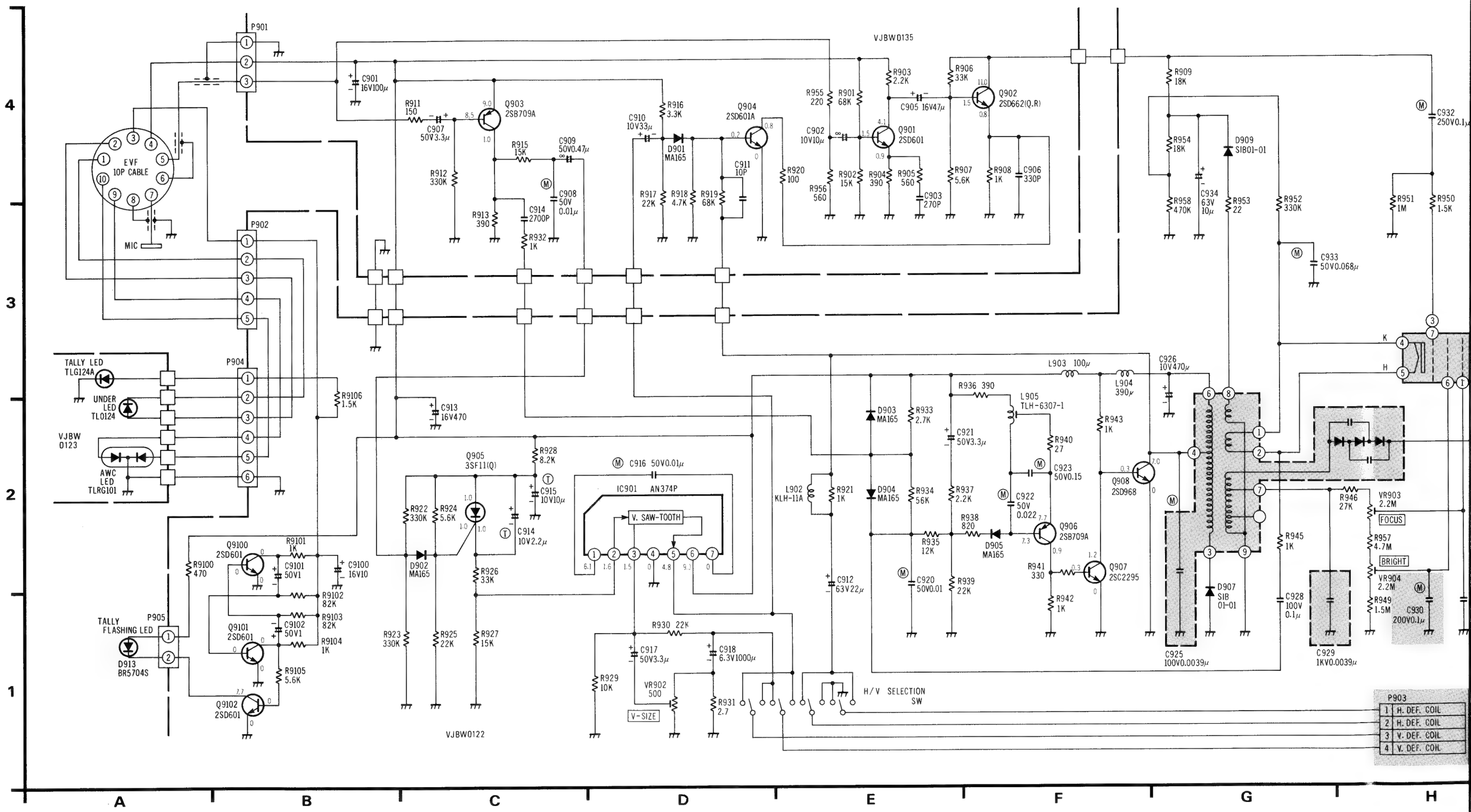

PRODUCT SAFETY NOTE

The shaded area on this schematic diagram incorporates special features important for protection from X-Radiation, fire and electrical shock hazards when servicing it is essential that only manufacturer's specified parts be used for the critical components in the shaded areas of the schematic.

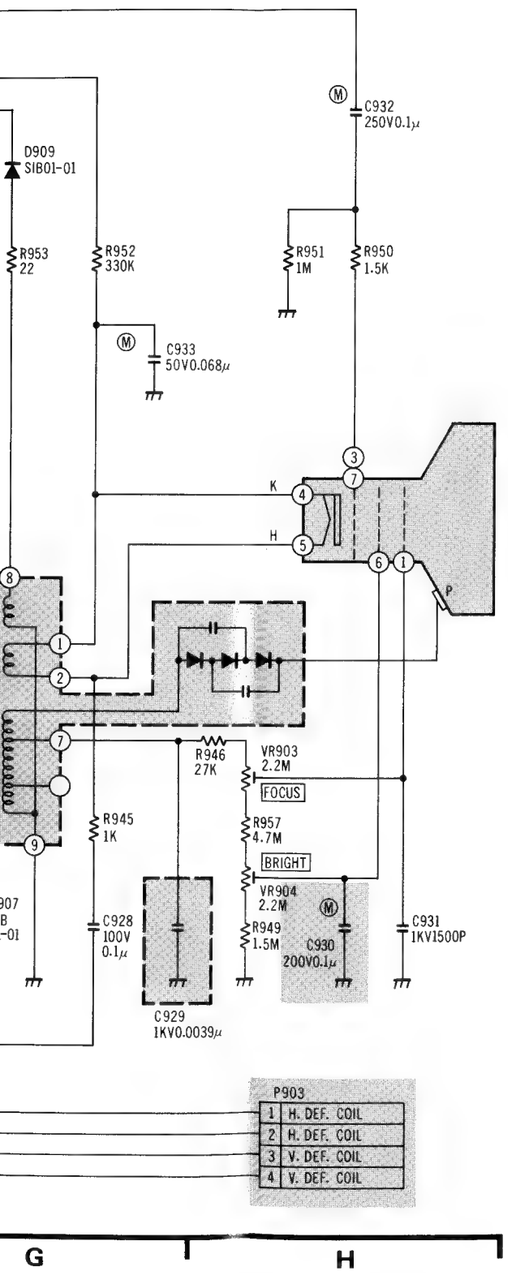

ELECTRONIC VIEWFINDER (A) CIRCUIT BOARD (VEPW0122)

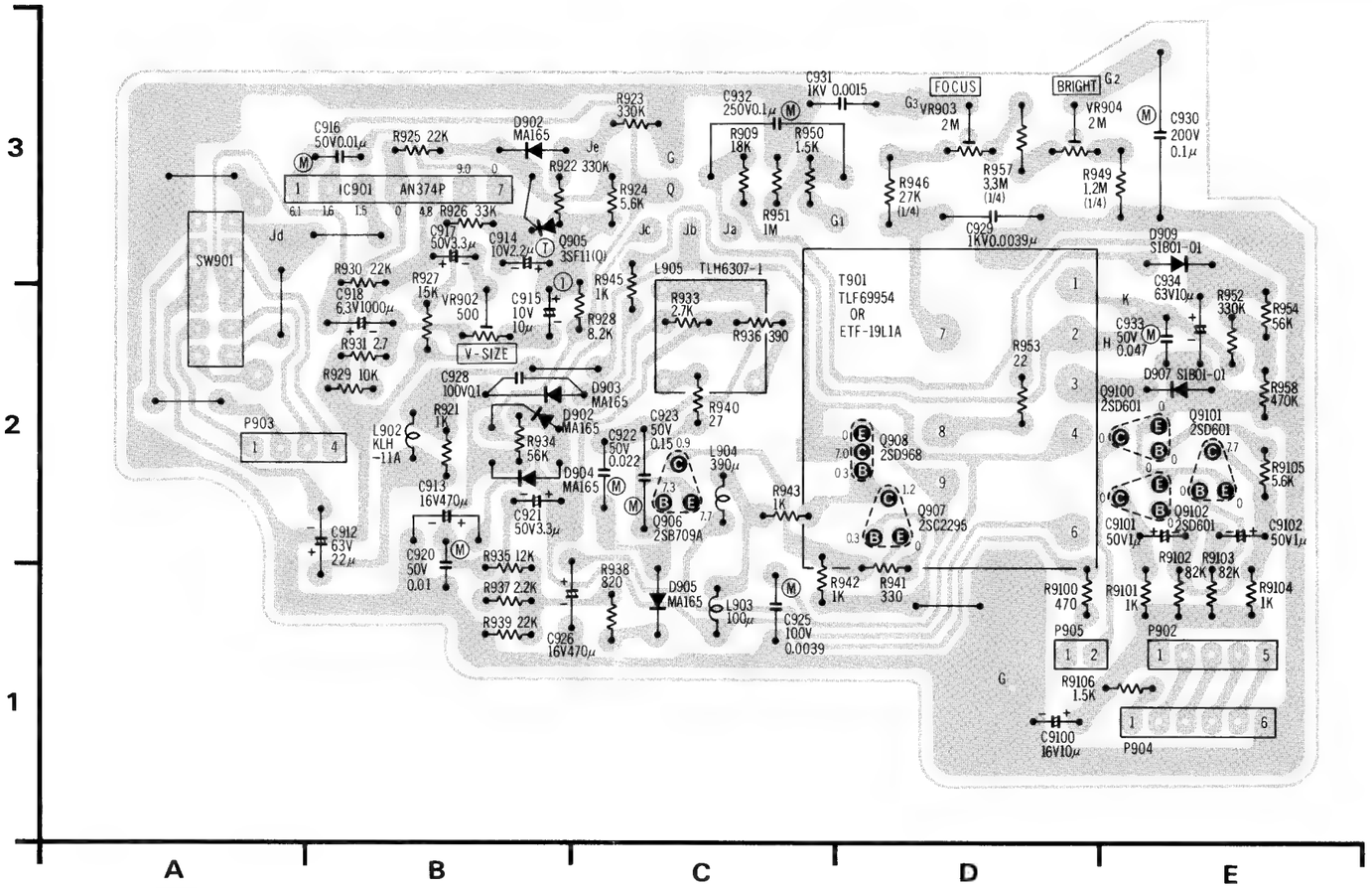

ELECTRONIC VIEWFINDER (B) CIRCUIT BOARD (VEPW0135)

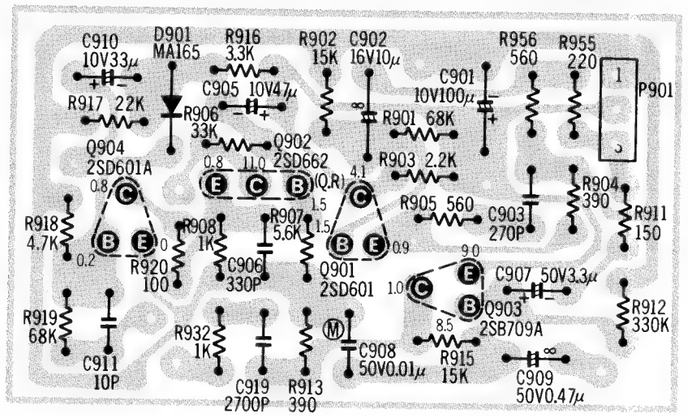

EVF LED CIRCUIT BOARD (VEPW0123)

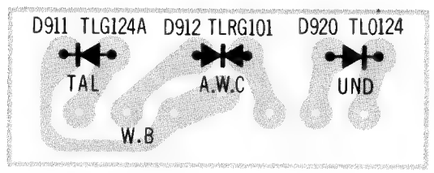

ELECTRONIC VIEWFINDER INTERCONNECTION SCHEMATIC DIAGRAM

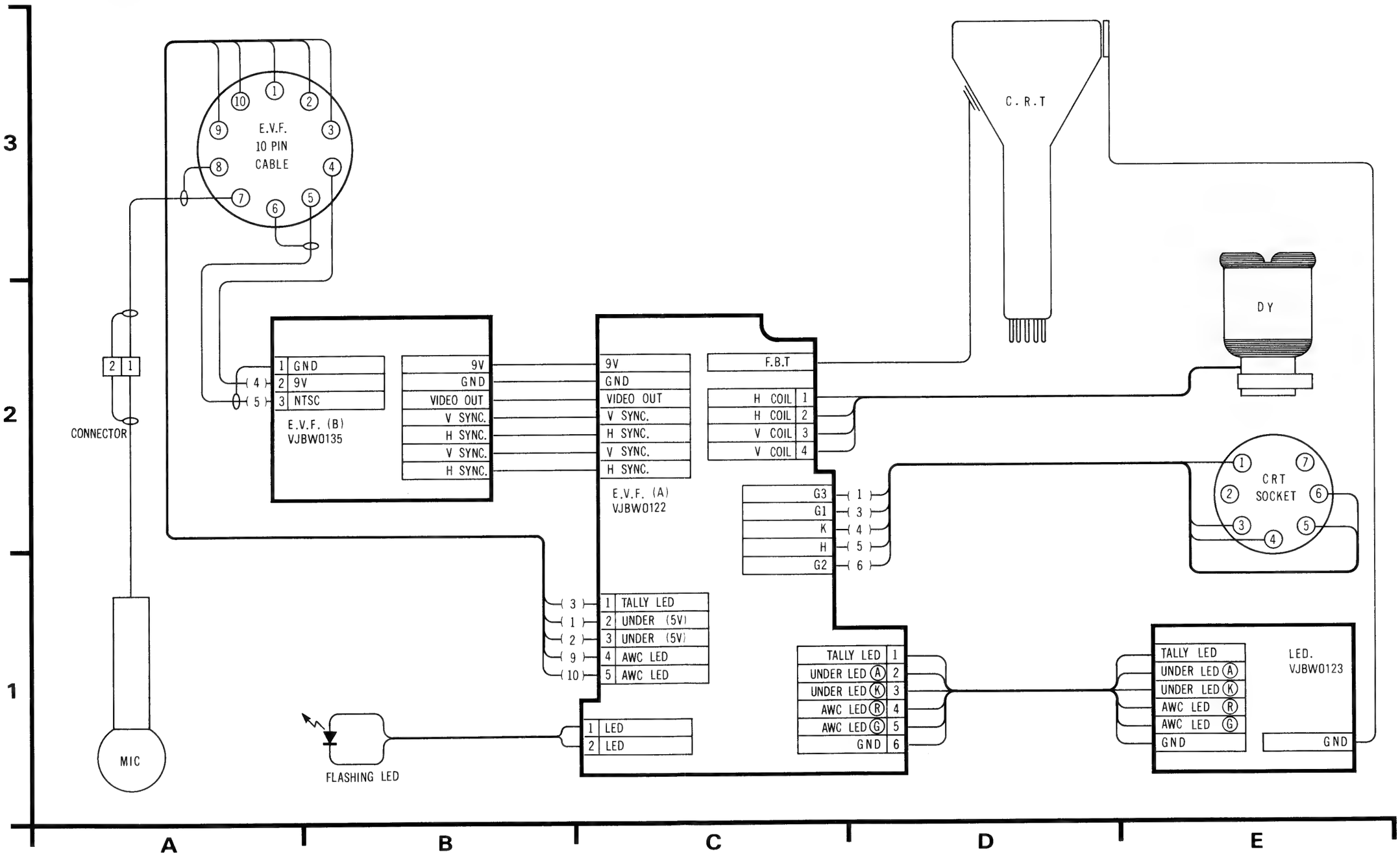

POWER
(OPTIONAL

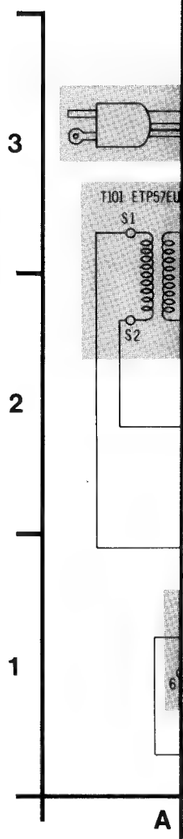

POWER SUPPLY SCHEMATIC DIAGRAM
(OPTIONAL ACCESSORY)

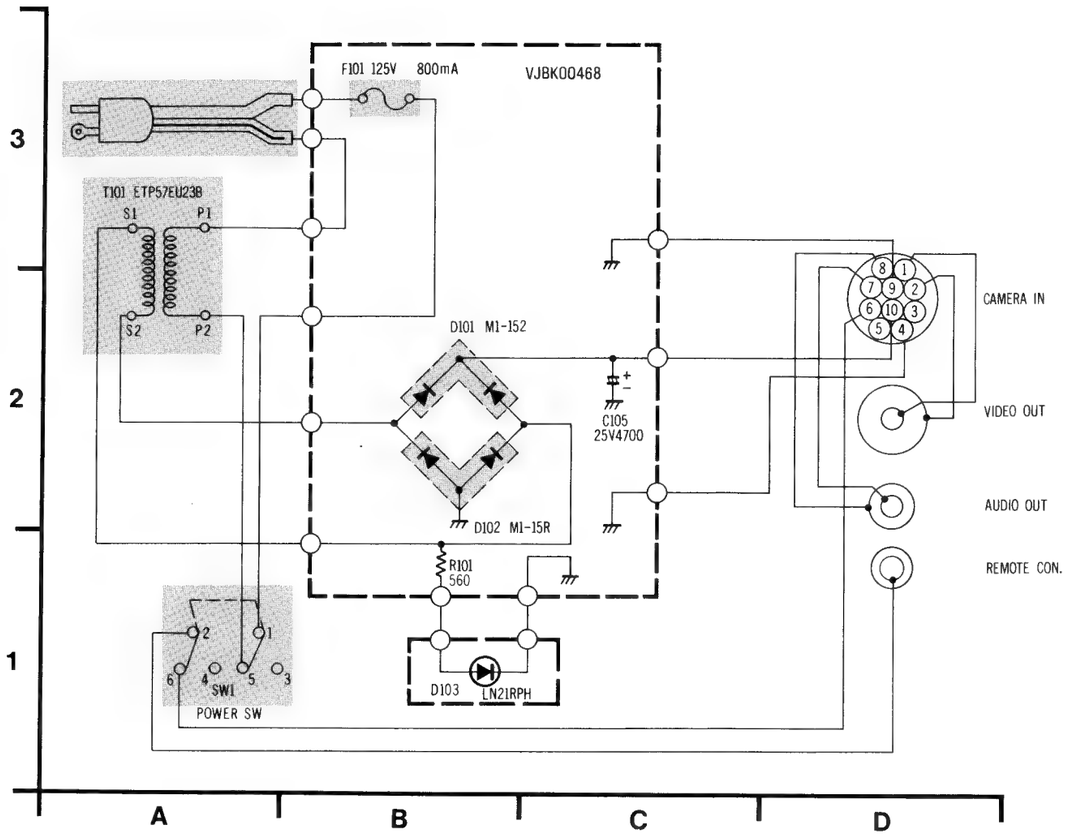

PRODUCT SAFETY NOTE

The shaded area on this schematic diagram incorporates special features important for protection from X-Radiation, fire and electrical shock hazards when servicing it is essential that only manufacturer's specified parts be used for the critical components in the shaded areas of the schematic.

POWER SUPPLY CIRCUIT BOARD (VEPK00468)

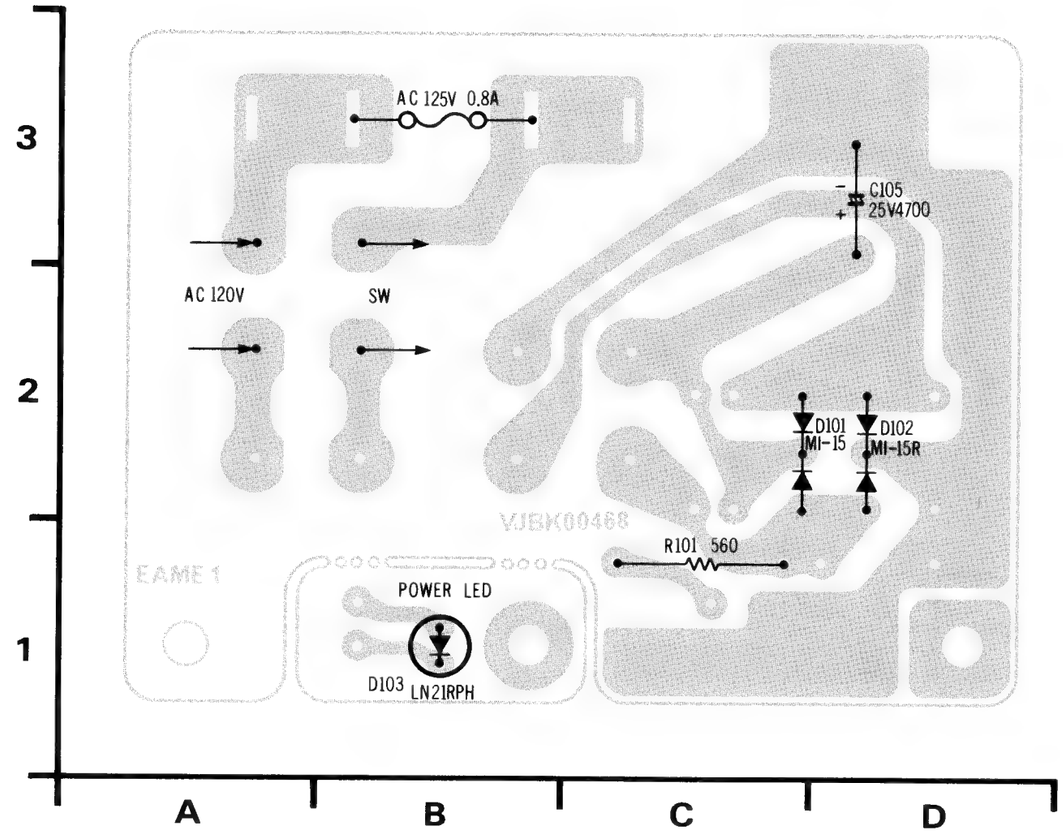

CIRCUIT BOARD LAYOUT

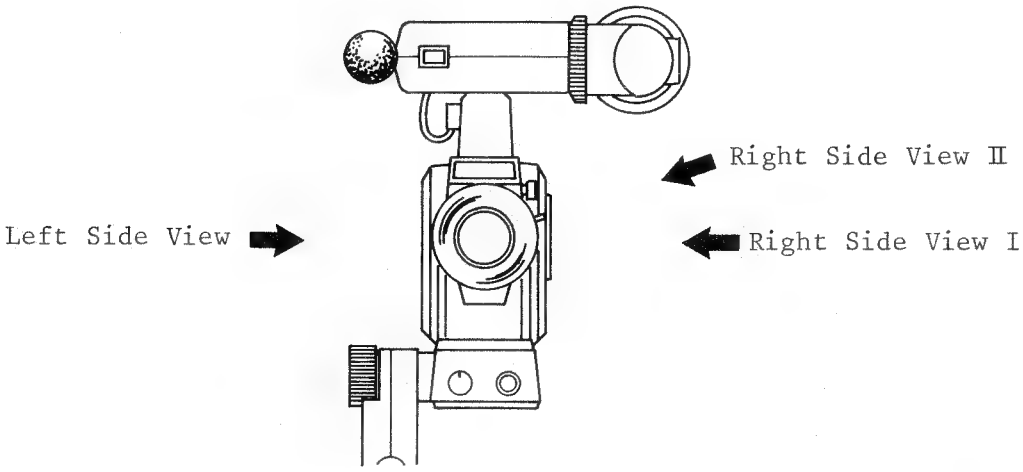

Left Side View

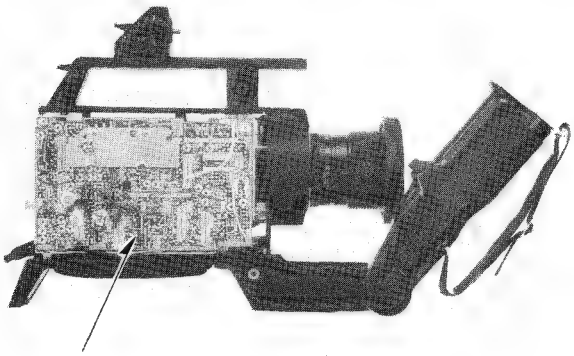

Right Side View I

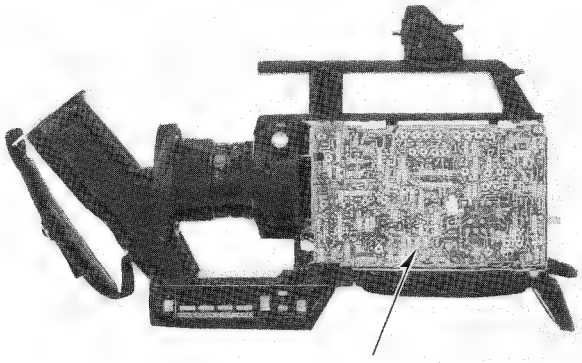

Right Side View II

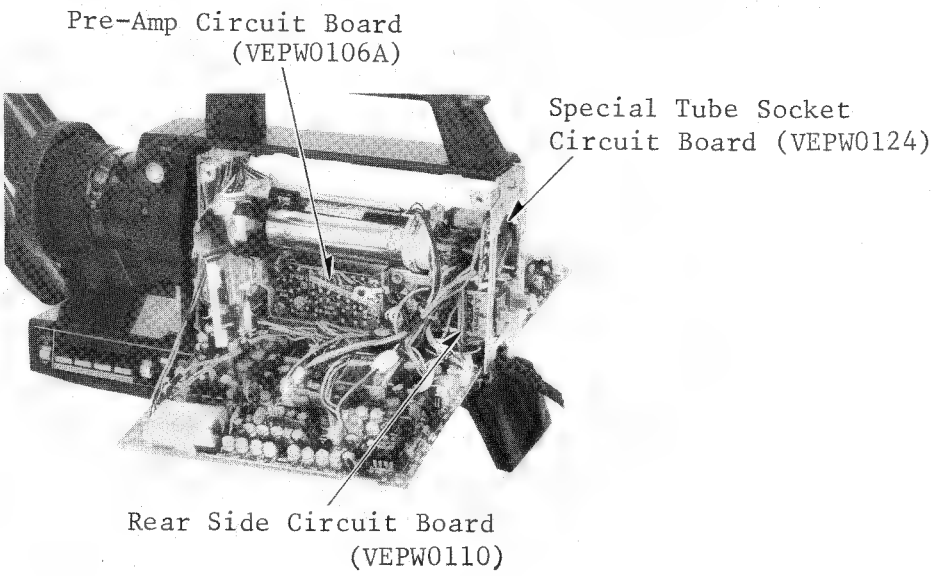

CAMERA UNIT INTERCONNECTION SCHEMATIC DIAGRAM

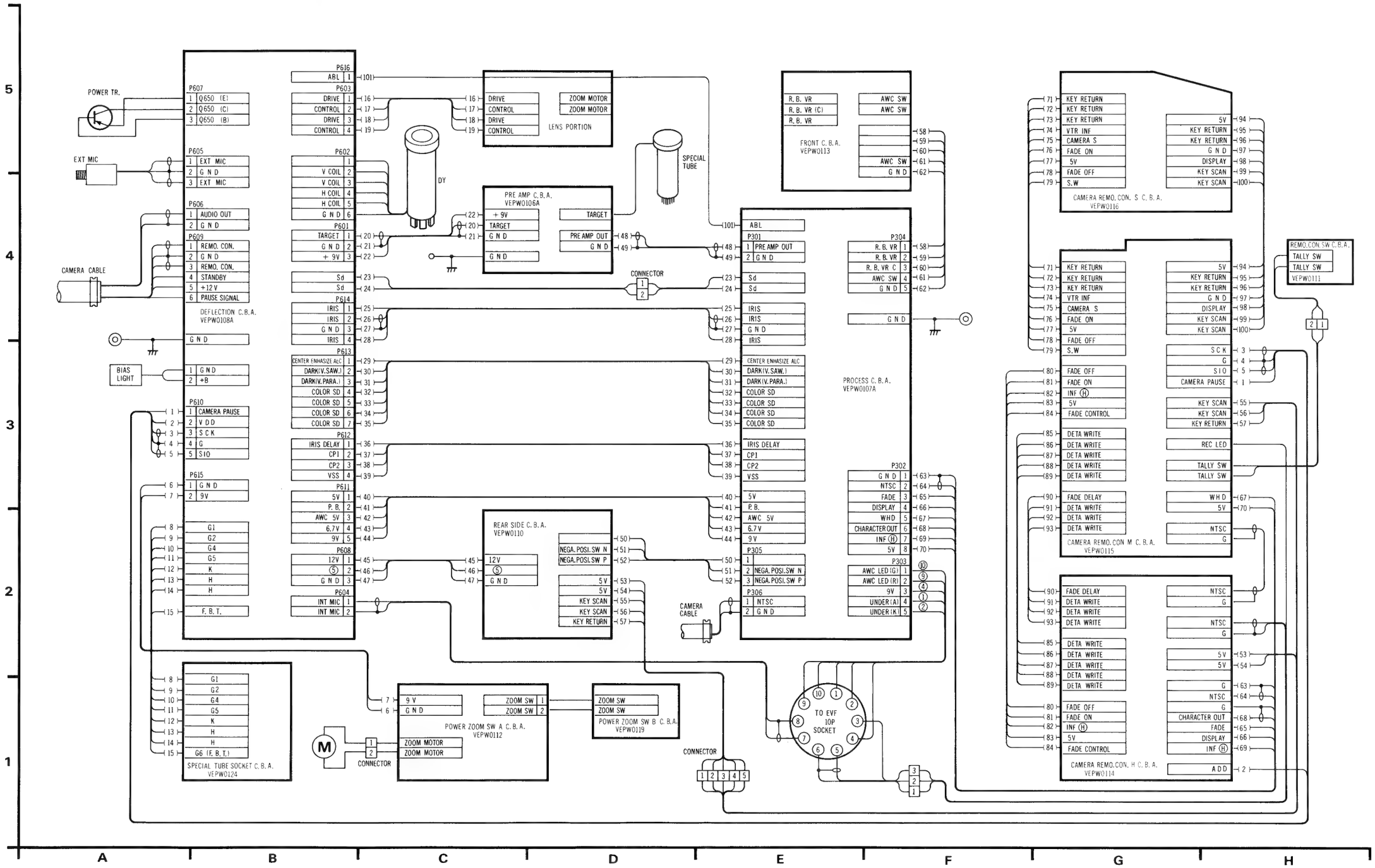

ORDER NO. VRD-8202-048

Service Manual

Color Video Camera

PK-802

Vol. 5

Exploded Views
Replacement
Parts List

SPECIFICATIONS:

Power Source:	DC 12 V ± 10% AC 120 V ± 10%, 60 Hz ± 0.5% (with Power Supply Unit)
Power Consumption: (with E.V.F)	DC 5.8 W at 12 V DC (Battery) DC 1.2 W at standby
Special Tube System:	2/3″ frequency separation single tube system (built-in stripe filter)
Single Carrier Frequency:	4.3 MHz
Focus System:	Electro-static type
Lens Mounting:	Built-in zoom lens (not "C" mount)
Lens:	6 : 1 zoom lens with auto/manual iris control. Auto zoom lens and macro construction F: 1.4, f: 12 mm—72 mm d: 1.0 m to infinity
Lens Diameter:	49 mm
Light Sensitivity:	Minimum light intensity on optical image: 40 Lux (F: 1.4) Optimum light intensity on optical image: 900 Lux
Video Output Level:	1.0 Vp-p, 75Ω (M type coaxial connector) (Standard NTSC signal)
Sync. System:	Internal Sync: RS-170
Signal to Noise Ratio:	More than 45 dB
Horizontal Resolution:	More than 270 lines
Color Temperature Control:	2 step switch (indoor/outdoor) & auto adjust
Microphone:	Condenser Microphone
Audio Output Level:	−20 dB, Hi-impedance
Audio Output Impedance:	High impedance (1 KΩ)
External Microphone Input Impedance:	600Ω unbalanced
Electronic Viewfinder:	Monochrome 1 inch CRT
Operating Temperature:	5°C to 35°C
Operating Humidity:	10% to 75%
Operating Position:	Normal position only
Weight:	Camera Head with E.V.F. 5.1 lbs (with lens, 7 ft. cable & shoulder pad/handle grip) AC adaptor (option) 2.4 lbs
Dimensions:	Camera Head with E.V.F. 8.3″(W) × 8.7″(H) × 11.2″(D) 208 mm(W) × 218 mm(H) × 282 mm(D) AC adaptor (option) 3″(W) × 3″(H) × 6″(D) 80 mm(W) × 75 mm(H) × 149 mm(D)

Weight and dimensions shown are approximate.
Specifications are subject to change without notice.

Panasonic

Panasonic Company
Division of Matsushita Electric
Corporation of America
One Panasonic Way, Secaucus,
New Jersey 07094

Panasonic Hawaii Inc.
91-238 Kauhi St. Ewa Beach
P.O. Box 774
Honolulu, Hawaii 96808-0774

Panasonic Canada
Division of Matsushita Electric
of Canada Limited
5770 Ambler Drive, Mississauga,
Ontario, L4W 2T3

Panasonic Sales Company,
Division of Matsushita Electric
of Puerto Rico, Inc.
Ave, 65 De Infanteria, KM 9.7
Victoria Industrial Park
Carolina, Puerto Rico 00630

CONTENTS

EXPLODED VIEWS (Camera Head)

1. Camera Unit Section 5-1
2. Camera Unit Casing Parts Section 5-2
3. Remote Control Shoulder Unit Section 5-3
4. Electronic Viewfinder Section 5-4
5. Packing Parts Section 5-5

MECHANICAL REPLACEMENT PARTS LIST (CAMERA UNIT) 5-6

ELECTRICAL REPLACEMENT PARTS LIST (CAMERA UNIT) .... 5-7 ∿ 5-16

EXPLODED VIEWS (Power Supply Unit/Optional Accessory)

1. Power Supply Unit Section 5-17
2. Packing Parts Section 5-18

MECHANICAL REPLACEMENT PARTS LIST (POWER SUPPLY UNIT) ... 5-18

ELECTRICAL REPLACEMENT PARTS LIST (POWER SUPPLY UNIT) ... 5-18

EXPLODED VIEW ❶ *Camera Unit Section*

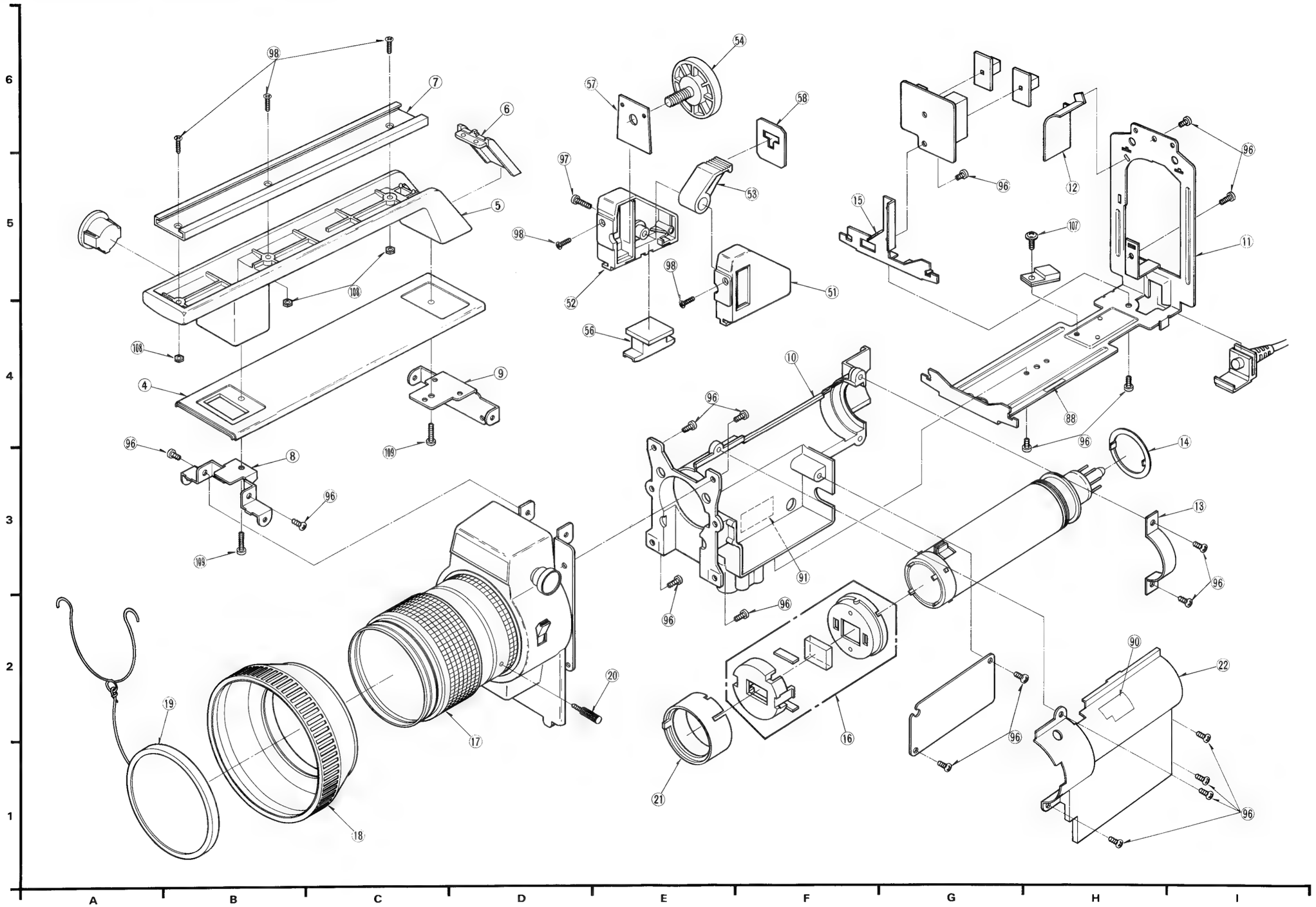

❷ Camera Unit Casing Parts Section

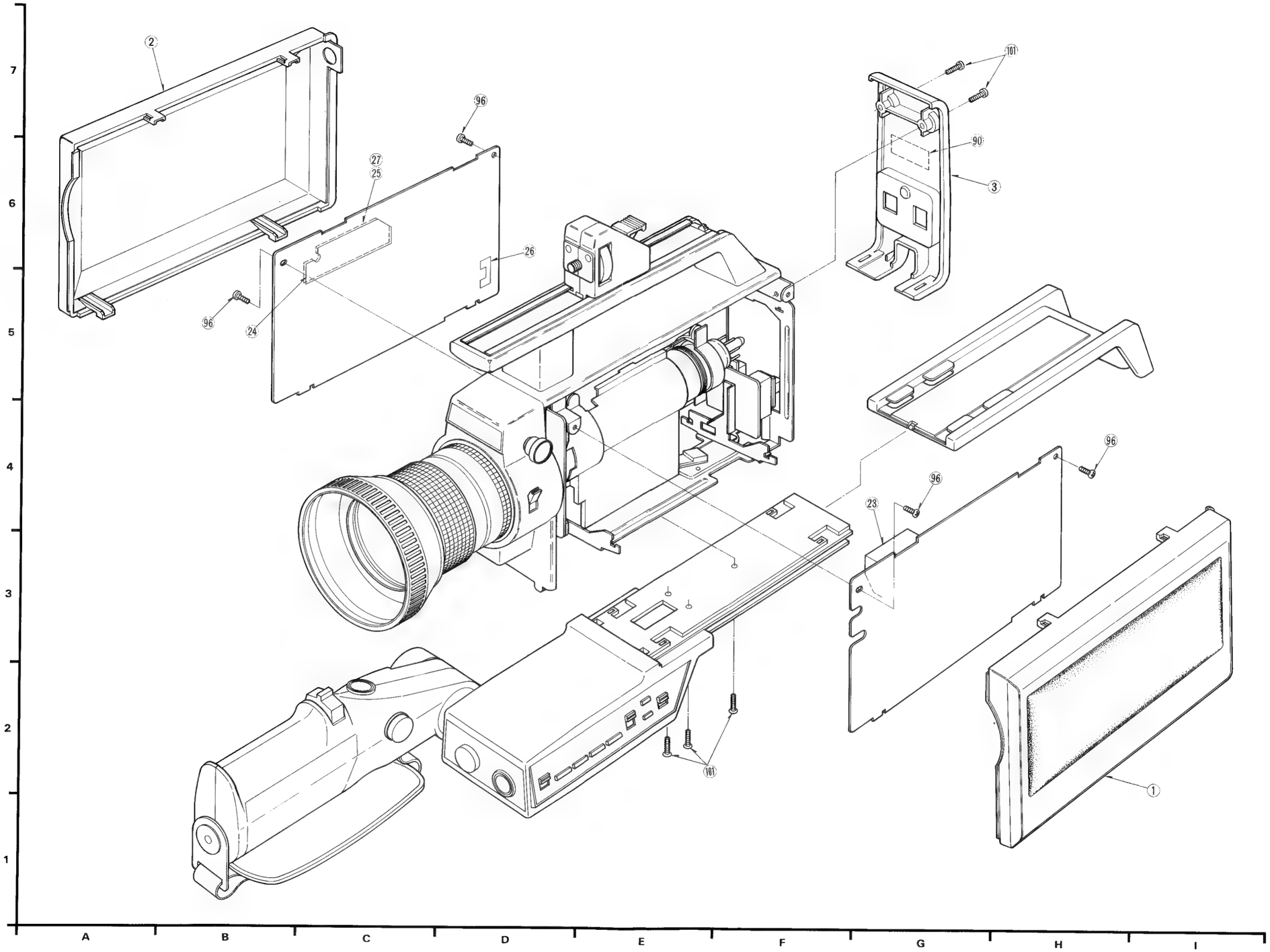

❸ *Remote Control Shoulder Unit Section*

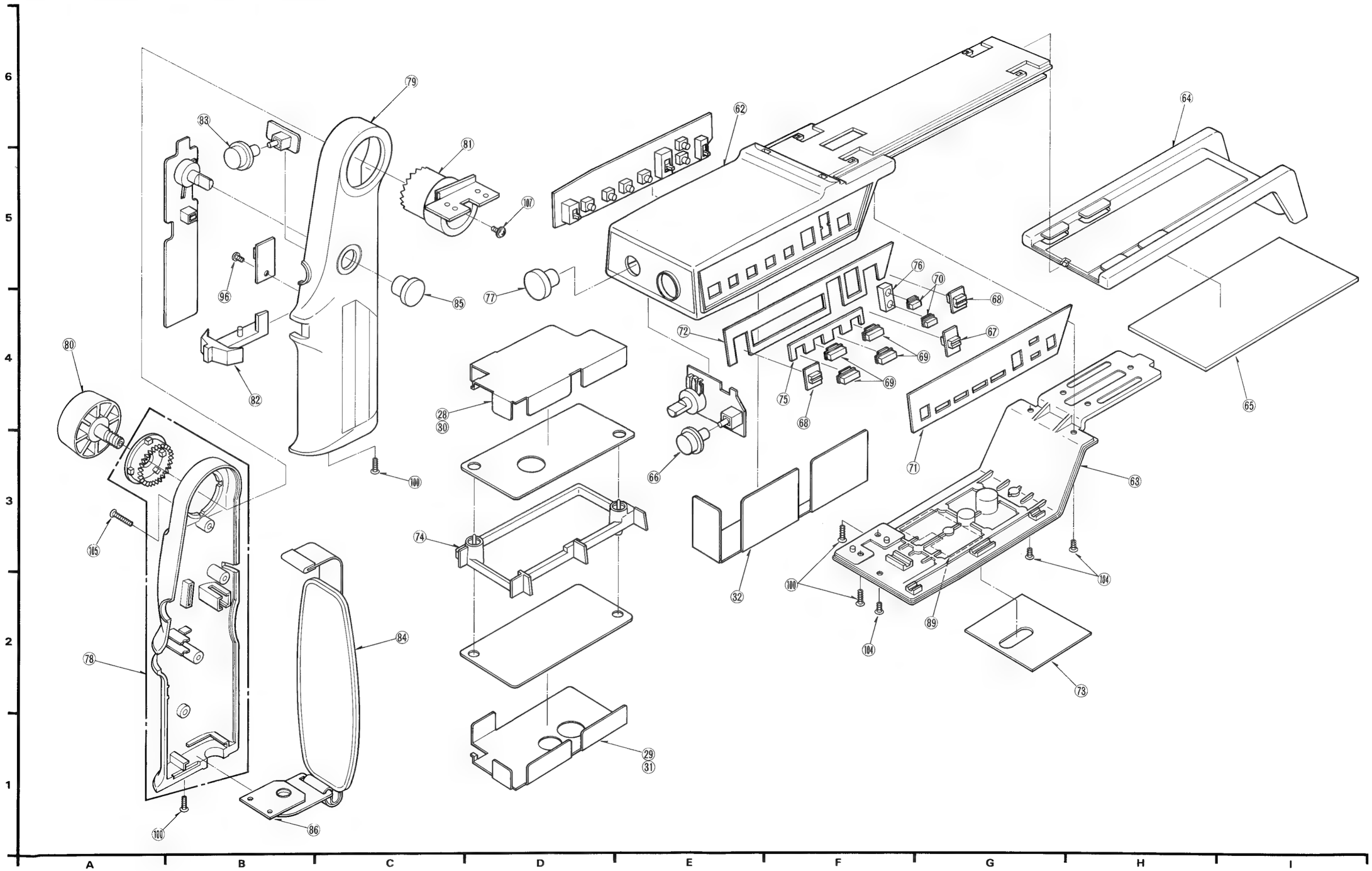

❹ *Electronic Viewfinder Section*

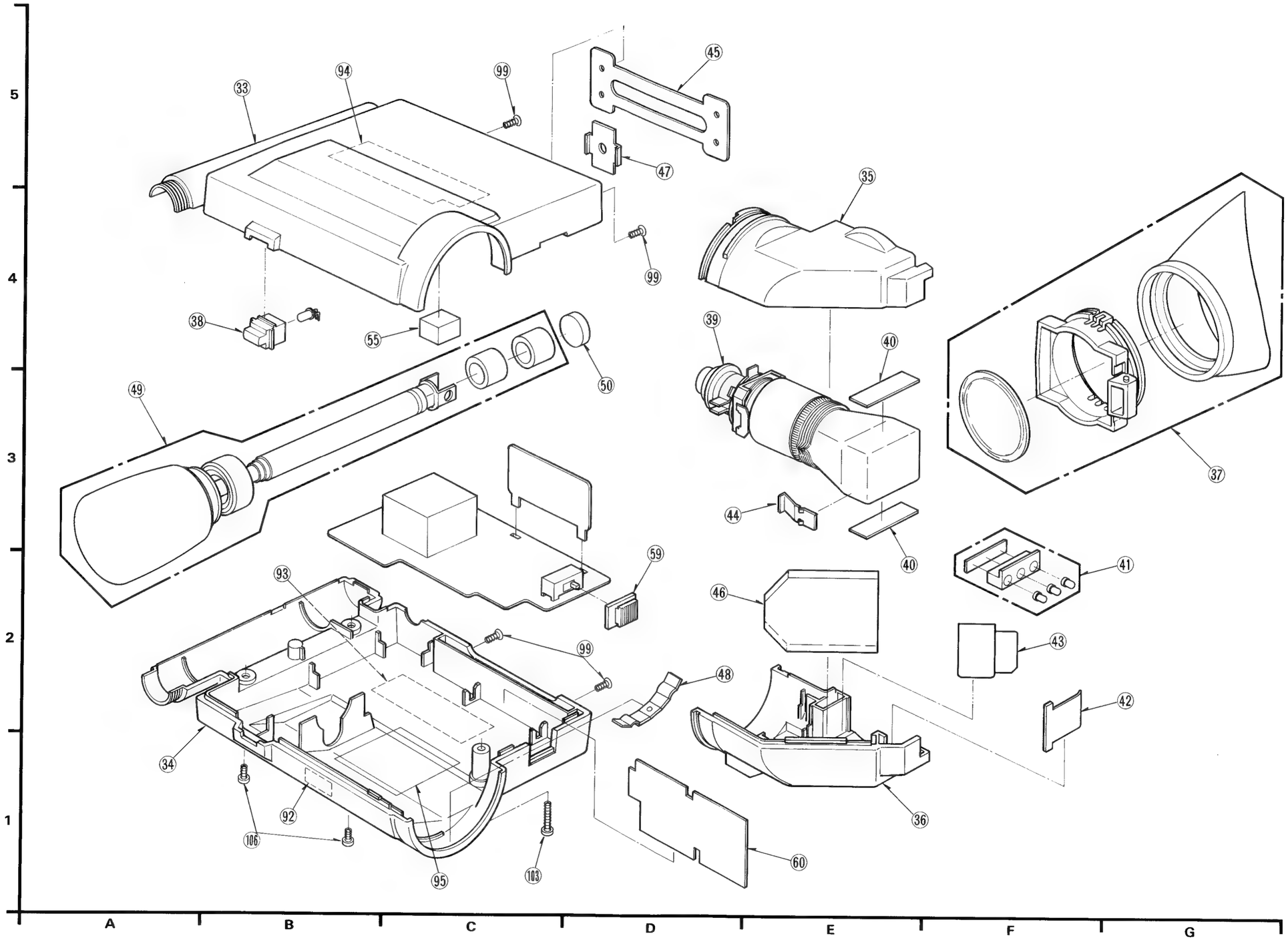

❺ Packing Parts Section

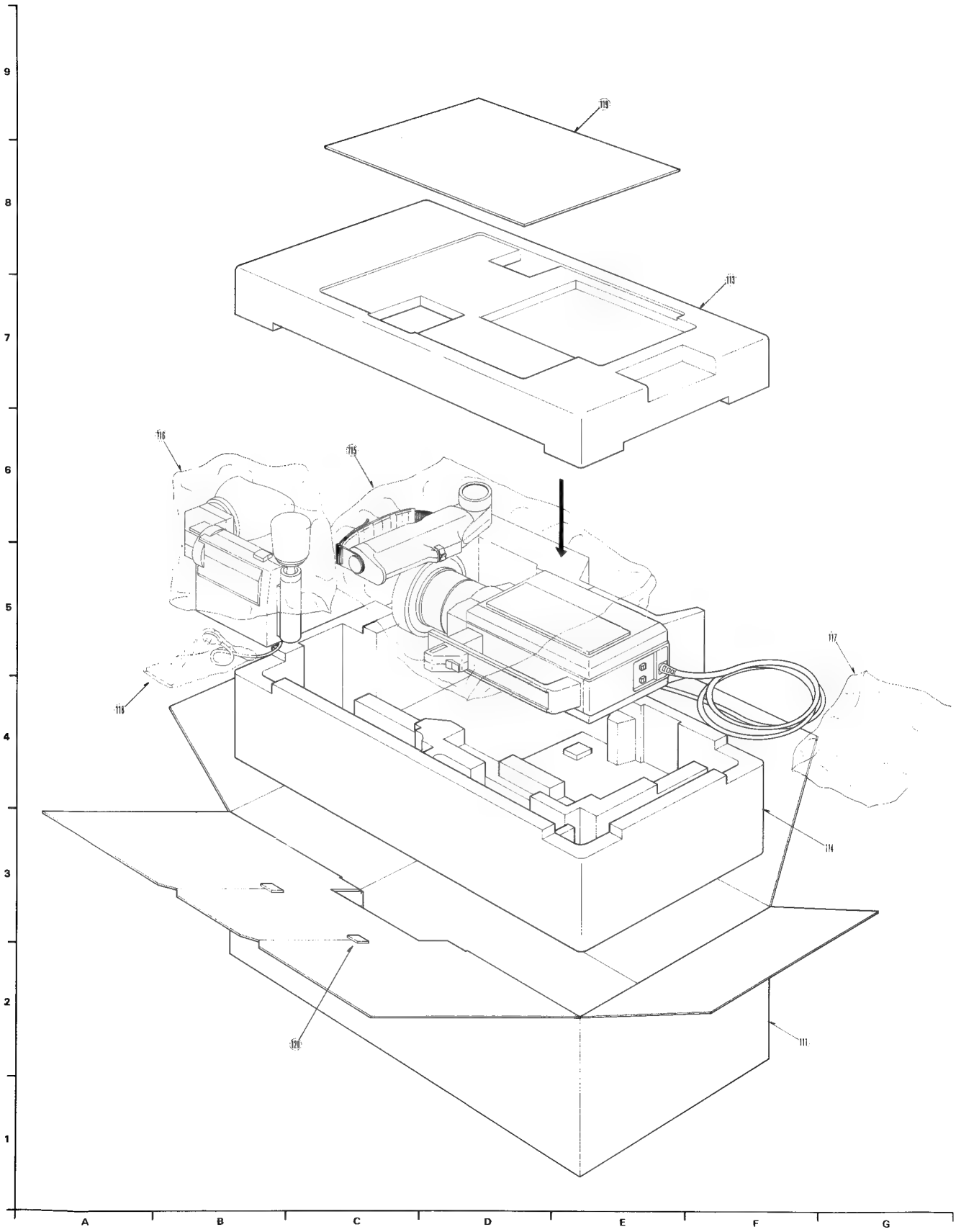

Mechanical Replacement Parts List

Note: * Be sure to make your orders of replacement parts according to this list.
○ . . . . Available replacement part
× . . . . Not available as replacement
□ . . . . Only available on special order

Item No.	Drawing No.	Description	Pcs/Set	Availability	Part No.	Remark
		C S U				
1		RIGHT SIDE COVER ASS'Y	1	○	VYKW0220	
2		LEFT SIDE COVER ASS'Y	1	○	VYKW0221	
3		BACK COVER ASS'Y	1	○	VYKW0222	
4		TOP COVER	1	○	VKGW0235	
5		HANDLE	1	○	VKHW0035	
6		HANDLE COVER	1	○	VKHW0036	
7		ACCESSORIES SHOE	1	□	VGQW0016	
8		HANDLE ANGLE (FRONT)	1	○	VMAW0091	
9		HANDEL ANGEL (REAR)	1	○	VMAW0092	
10		MAIN CHASSIS	1	○	VMKW0025	
11		SUB CHASSIS	1	○	VMAW0090	
12		SUB CHASSIS ANGLE	1	○	VMAW0101	
13		DY BAND	1	○	VMAW0098	
14		DY SPRING	1	○	VMBW0023	
15		PRINT ANGLE	1	○	VMAW0093	
16		FILTER FIXTURE ASS'Y	1	○	VXEW0007	
17		6-MULTIPLE POWER ZOOM LENS	1	○	VFLW0040	
18		LENS HOOD	1	○	VKUW0045	
19		HOOD CAP ASS'Y	1	○	VXJW0002	
20		LENS LEVER	1	○	VMLW0013	
21		FILTER RING	1	○	VMDW0028	
		CASE				
22		PRE-AMP SHIELD COVER	1	○	VSCW0048	
23		AVR SHIELD CASE	1	○	VSCW0049	
24		14MHz CCD SHIELD CASE ASS'Y	1	○	VXAW0013	
25		14MHz CCD SHIELD CASE (B)	1	○	VSCW0051	
26		DL SHIELD PLATE	1	○	VSCW0052	
27		14MHz CCD FIBER SHEET	1	○	VMZW0057	
28		REMO. CON. SHIELD CASE (A)	1	○	VSCW0054	
29		REMO. CON. SHIELD CASE (B)	1	○	VSCW0055	
30		REMO. CON. FIBER SHEET (A)	1	○	VMZW0061	
31		REMO. CON. FIBER SHEET (B)	1	○	VMZW0062	
32		REMO. CON. FIBER SHEET (C)	1	○	VMZW0063	
		SIDE EVF (II)				
33		EVF TOP COVER	1	○	VKGW0226	
34		EVF BOTTOM COVER	1	○	VKGW0227	
35		EVF CRT COVER (A)	1	○	VKGW0228	
36		EVF CRT COVER (B)	1	○	VKGW0229	
37		EVF DOOR ASS'Y	1	○	VYKW0225	
38		TALLY DIFFUSION PIECE	1	○	VGQW0009	
39		CRT FIXING BUSH	1	○	VMGW0016	
40		EVF CRT CUSHION	2	○	VMGW0029	
41		LED SPACER ASS'Y	1	○	VXFW0009	
42		EVF SPRING	1	○	VMBW0028	
43		EVF MIRROR SPRING	1	○	VMBW0013	
44		GROUND SPRING	1	○	VMAW0051	
45		EVF CASE FIXING ANGLE (A)	1	□	VMAW0103	
46		EVF MIRROR	1	○	VMRW0002	
47		EVF MOVEABLE ANGLE	1	○	VMAW0094	
48		EVF ROTATION SPRING	1	○	VMBW0027	
49		MIC KIT	1	□	VXMW0023	
50		MIC SPONGE (B)	1	□	VMFW0012	
51		EVF HOLDING CASE (R)	1	○	VKGW0224	
52		EVF HOLDING CASE (L)	1	○	VKGW0225	
53		EVF FIXING LEVER	1	□	VMLW0012	
54		EVF KNOB	1	□	VGTW0033	
55		EVF CUSHION	1	○	VMGW0030	
56		EVF FIXING PIECE	1	○	VMXW0048	
57		EVF CASE FIXING ANGLE (B)	1	○	VMAW0096	
58		EVF HOLDING CASE SPACER	1	□	VMXW0049	
59		R/L CHANGE KNOB	1	○	VGTW0044	
60		EVF BARRIER	1	□		

Item No.	Drawing No.	Description	Pcs/Set	Availability	Part No.	Remark
		REMO. CON. SHOULDER				
62		REMO. CON. CASE ASS'Y	1	○	VYKW0235	
63		REMO. CON. CHASSIS	1	○	VMKW0026	
64		SHOULDER SLIDE	1	○	VKGW0221	
65		SHOULDER PAD	1	○	VMFW0018	
66		PUSH BUTTON	1	○	VGTW0041	
67		SLIDE SW KNOB (A)	1	○	VGTW0034	
68		SLIDE SW KNOB (B)	2	○	VGTW0035	
69		PUSH BUTTON (A)	4	○	VGTW0036	
70		PUSH BUTTON (B)	2	○	VGTW0037	
71		REMO. CON. PANEL	1	○	VGPW0144	
72		REMO. CON. PLATE	1	○	VMAW0097	
73		REMO. CON. BOTTOM SHEET	1	○	VKNW0017	
74		P.C.B. FIXING PIECE	1	○	VKGW0223	
75		REMO. CON. CUSHION (A)	1	○	VMFW0019	
76		REMO. CON. CUSHION (B)	1	○	VMFW0020	
77		VOLUME KNOB	1	○	VGTW0040	
		GRIP				
78		LEFT SHOULDER GRIP ASS'Y	1	○	VYHW0043	
79		RIGHT SHOULDER GRIP	1	○	VKHW0033	
80		LOCK KNOB	1	○	VGTW0039	
81		CRUTCH (A)	1	○	VMVW0005	
82		POWER ZOOM BUTTON	1	○	VGTW0038	
83		PUSH BUTTON	1	○	VGTW0041	
84		HAND STRAP	1	○	VFBW0007	
85		VOLUME KNOB	1	○	VGTW0040	
86		HAND STRAP SCREW ASS'Y	1	○	VXAW0012	
		LABEL				
87		CAUTION LEBEL (D)	1	○	VQLW0325	
88		CSU CHASSIS LABEL	1	○	VQLW0074	
89		CSU CAUTION LABEL	1	○	VQLW0322	
90		CAUTION LABEL	1	○	VQLW0256	
91		ATTENTION LABEL	1	○	VQLW0326	
92		EVF CHASSIS LABEL	1	○	VQLW0074	
93		EVF CAUTION LABEL	1	○	VQLW0320	
94		WARNING LABEL	1	○	VQLW0324	
95		HIGH VOLTAGE CAUTION LABEL	1	○	VQLW0323	
		SCREW				
96		BIND SCREW, 3φx6mm	24	○	XSB3+6FU	
97		BIND SCREW, 3φx10mm	2	○	XSB3+10FXK	
98		FLUSH HEAD MACHINE SCREW,	5	○	XSS2+5FXK	
		2φx5mm				
99		FLUCH HEAD MACHINE SCREW,	4	○	XSS26+5FXK	
		2.6φx5mm				
100		FLUCH HEAD MACHINE SCREW,	4	○	XSS3+6FXK	
		3φx6mm				
101		FLUCH HEAD MACHINE SCREW,	3	○	XSS3+10FXK	
		3φx10mm				
102		BIND TAPPING SCREW, 3φx16mm	1	○	XTB3+16GFXK	
103		BIND TAPPING SCREW, 3φx25mm	1	○	XTB3+25GFXK	
104		FLUSH HEAD TAPPING SCREW,	3	○	XTS3+8GFXK	
		3φx8mm				
105		FLUSH HEAD TAPPING SCREW,	1	○	XTS3+20GFXK	
		3φx20mm				
106		PAN HEAD TAPPING SCREW,	2	○	XTN26+6GFXK	
		2.6φx6mm				
107		PAN HEAD WITH WASHER ASS'Y,	2	○	XYN3+F6FU	
		3φx6mm				
108		HEX. HEADS NUTS, 2φ	3	○	XNF2JFXK	
109		BIND TAPPING SCREW, 3φx12mm	2	○	XTB3+12GFU	

Item No.	Drawing No.	Description	Pcs/ Set	Availa-bility	Part No.	Remark
		PACKING CASE				
112		PACKING CASE	1	o	VPKW0202	
113		CUSHION TOP	1	o	VPGW0062	
114		CUSHION BOTTOM	1	o	VPGW0063	
115		POLY BAG FOR CAMERA HEAD	1	o	XZB29X55A02	
116		POLY BAG FOR EVF	1	o	XZB22X42A02	
117		POLY BAG FOR CAMERA CABLE	1	o	XZB15X28A02	
118		POLY BAG FOR EVF CABLE	1	o	XZB10X15A02	
119		FAN BAG KIT	1	o	VQFW0094	
120		HANDLE	1	o	VPQW0004	

Electrical Replacement Parts List

Note:
1. Be sure to make your orders of replacement parts according to this list.
2. IMPORTANT SAFETY NOTICE
   Components identified by shade have special characteristics important for safety. When replacing any of these components, use only the original ones.
3. Unless otherwise specified;
   All resistors are in OHMS (Ω), 1/8w, ±5% carbon, K=1,000Ω, M=1,000KΩ.
   All capacitors are in MICROFARADS (μF), ±10% P=μμF.
   All coils are in MICROHENRIES (μH), m=10,μ.
4. C.B.A: Circuit Board Assembly.
5. C.B: Circuit Board.

Ref. No.		Part No.	Part Name & Description	Pcs / Set	Remarks
		VEPW0106A	PRE AMP C.B.A.	1	
		VEPW0107A	PROCESS C.B.A.	1	
		VEPW0108A	DEFLECTION C.B.A.	1	
		VEPW0110	REAR SIDE C.B.A.	1	
		VEPW0111	REMO. CON. SW C.B.A.	1	
		VEPW0112	POWER ZOOM SW A C.B.A.	1	
		VEPW0119	POWER ZOOM SW B C.B.A.	1	
		VEPW0113	FRONT C.B.A.	1	
		VEPW0124	SPECIAL TUBE SOCKET C.B.A.	1	
		VEPW0114	CAMERA REMO. CON. H C.B.A.	1	
		VEPW0115	CAMERA REMO. CON. M C.B.A.	1	
		VEPW0116	CAMERA REMO. CON. S C.B.A.	1	
		VEPW0122	EVF A C.B.A.	1	
		VEPW0135	EVF B C.B.A.	1	
		VEPW0123	EVF LED C.B.A.	1	
		VEPW0089A	BIAS LIGHT	1	
		VEPW0089B	BIAS LIGHT	1	
			PRE-AMP C.B.A.		
			Integrated Circuit		
IC201		EHMK720A72FB		1	
			Transistor		
Q201		2SK218		1	
			Diode		
D201		MA26		1	
			Resistors		
R201		ERD25TJ565	1/4W 5.6M	1	
R202		ERO50CKF2704	1/2W 2.7M	1	
R203		ERD10TJ181	180	1	
R204		ERD10TJ561	560	1	
R205		ERD10TJ124	120K	1	
R206		ERD10TJ104	100K	1	

Ref. No.		Part No.	Part Name & Description			Pcs / Set	Remarks
			Capacitors				
C201		VCAMX100V223K	Mylar	100V	0.022	1	
C202		ECSF10E47	Tantalum	10V	47	1	
C203		VCAMX50V102K	Mylar	50V	0.001	1	
C204		ECCW1H010CC5	Ceramic	50V	1P	1	
C205		ECSF10E10	Tantalum	10V	10	1	
C206		ECSF10E47	Tantalum	10V	47	1	
C207		ECSF10E10	Tantalum	10V	10	1	
C208		ECSF35ER47	Tantalum	35V	0.47	1	
C209		ECCW1H080CC5	Ceramic	50V	8P	1	
C210		ECV1ZW40X53N	Trimmer	1W	40P	1	
C211		ECCW1H220JC5	Ceramic	50V	22P	1	
C212		ECSF6E47	Tantalum	6.3V	47	1	
C213		ECQE1104KN	Mylar	100V	0.1	1	
			Coils				
L201		ELT12R010			220μH	1	
L202		ELO606SK101K			100μH	1	
			Miscellaneous				
		VEKW0095	Lug Terminal Ass'y			1	
		VEKW0340	Connector Ass'y 3P			1	
		VEKW0331	Connector Ass'y 2P			1	
			PROCESS C.B.A.				
			Integrated Circuits				
IC301		AN2131				1	
IC302		AN2140				1	
IC303		AN2240				1	
IC304		AN2330				1	
IC305		MN6064				1	
IC306		EHM-723F13S	Hi-Mic			1	
IC307		AN2430				1	
IC308		MN8036				1	
IC309		EHM-K835W65S	Hi-Mic			1	
IC310		AN6914				1	
IC311		MN6069				1	
IC312		AN2340				1	
IC313		AN2341				1	
			Transistors				
Q301		2SB641(Q,R)				1	
Q302-306		2SD636(Q,R)				5	
Q307		2SB641(Q,R)				1	
Q308		2SD636(Q,R)				1	
Q309		2SC2377				1	
Q310,311		2SD636(Q,R)				2	
Q312		2SC2206				1	
Q313		2SB641(Q,R)				1	
Q314-317		2SD636(Q,R)				4	
Q318,319		2SB641(Q,R)				2	
Q320		2SA838(B,C)				1	

Ref. No.		Part No.	Part Name & Description	Pcs / Set	Remarks
			Diodes		
D301-304		MA165		4	
D305		MA26		1	
D306,307		MA165		2	
D308		MZ303A		1	
D309,310		MA165		2	
			Resistors		
R301		ERD10TJ102	1K	1	
R302		ERD10TJ152	1.5K	1	
R303		ERD10TJ332	3.3K	1	
R304		ER010CKF1802	18K	1	
R305-307		ERD10TJ224	220K	3	
R308		ERD10TJ563	56K	1	
R309		ERD10TJ122	1.2K	1	
R310,311		ERD10TJ472	4.7K	2	
R312		ERD10TJ105	1M	1	
R313		ERD10TJ392	3.9K	1	
R314-316		ERD10TJ102	1K	3	
R317		ERD10TJ222	2.2K	1	
R318		ERD10TJ102	1K	1	
R319		ERD10TJ104	100K	1	
R320		ERD10TJ122	1.2K	1	
R321		ERD10TJ182	1.8K	1	
R322		ERD10TJ391	390	1	
R323		ERD10TJ103	10K	1	
R324		ERD10TJ392	3.9K	1	
R325		ERD10TJ102	1K	1	
R326		ERD10TJ222	2.2K	1	
R328		ERD10TJ102	1K	1	
R329,330		ERD10TJ153	15K	2	
R331		ERD10TJ152	1.5K	1	
R334		ERD10TJ821	820	1	
R335		ERD10TJ683	68K	1	
R336		ERD10TJ333	33K	1	
R337		ERD10TJ392	3.9K	1	
R338		ERD10TJ273	27K	1	
R339		ERD10TJ103	10K	1	
R340		ERD10TJ561	560	1	
R341		ERD10TJ100	10	1	
R342		ERD10TJ561	560	1	
R343		ERD10TJ562	5.6K	1	
R344		ERD10TJ331	330	1	
R345		ERD10TJ271	270	1	
R346		ERD10TJ681	680	1	
R347		ERD10TJ273	27K	1	
R348,349		ERD10TJ561	560	2	
R350		ERD10TJ102	1K	1	
R351,352		ERD10TJ152	1.5K	2	
R353,354		ERD10TJ153	15K	2	
R355		ERD10TJ473	47K	1	
R356		ERD10TJ104	100K	1	
R357,358		ERD10TJ153	15K	2	
R359		ERD10TJ473	47K	1	
R360		ERD10TJ104	100K	1	
R361-363		ERD10TJ562	5.6K	3	
R364		ERD10TJ104	100K	1	
R365,366		ERD10TJ822	8.2K	2	
R367,368		ERD10TJ182	1.8K	2	
R369		ERD10TJ123	12K	1	
R370		ERD10TJ562	5.6K	1	
R371		ERD10TJ472	4.7K	1	
R372,373		ERD10TJ103	10K	2	
R374		ERD10TJ333	33K	1	
R375,376		ERD10TJ104	100K	2	
R377		ERD10TJ271	270	1	
R379		ERD10TJ122	1.2K	1	
R380		ERD10TJ222	2.2K	1	
R381		ERD10TJ561	560	1	

Ref. No.		Part No.	Part Name & Description	Pcs / Set	Remarks
R382		ERD10TJ752	7.5K	1	
R383		ERD10TJ163	16K	1	
R384		ERD10TJ472	4.7K	1	
R385		ERD10TJ561	560	1	
R386,387		ERD10TJ223	22K	2	
R388		ERD10TJ152	1.5K	1	
R389		ERD10TJ272	2.7K	1	
R390,391		ERD10TJ102	1K	2	
R392		ERD10TJ183	18K	1	
R393,394		ERD10TJ333	33K	2	
R395		ERD10TJ330	33	1	
R396,397		ERD10TJ681	680	2	
R398		ERD10TJ221	220	1	
R399		ERD10TJ393	39K	1	
R3100,3101		ERD10TJ223	22K	2	
R3102		ERD10TJ103	10K	1	
R3103		ERD10TJ102	1K	1	
R3104		ERD10TJ103	10K	1	
R3105		ERD10TJ393	39K	1	
R3106,3107		ERD10TJ223	22K	2	
R3108,3109		ERD10TJ393	39K	2	
R3110		ERD10TJ472	4.7K	1	
R3111		ERD10TJ562	5.6K	1	
R3112		ERD10TJ223	22K	1	
R3113		ERD10TJ562	5.6K	1	
R3114		ERD10TJ682	6.8K	1	
R3115		ERD10TJ562	5.6K	1	
R3116		ERD10TJ563	56K	1	
R3117		ERD10TJ562	5.6K	1	
R3118,3119		ERD10TJ153	15K	2	
R3120		ERD10TJ473	47K	1	
R3121		ERD10TJ102	1K	1	
R3122		ERD10TJ222	2.2K	1	
R3123		ERD10TJ332	3.3K	1	
R3124		ERD10TJ101	100	1	
R3125		ERD10TJ104	100K	1	
R3126		ERD10TJ472	4.7K	1	
R3127		ERD10TJ104	100K	1	
R3128		ERD10TJ393	39K	1	
R3129		ERD10TJ473	47K	1	
R3130		ERD10TJ103	10K	1	
R3131		ERD10TJ472	4.7K	1	
R3132		ERD10TJ222	2.2K	1	
R3133		ERD10TJ473	47K	1	
R3134-3136		ERD10TJ102	1K	3	
R3137		ERD10TJ561	560	1	
R3138		ERD10TJ103	10K	1	
R3139		ERD10TJ272	2.7K	1	
R3140		ERD10TJ560	56	1	
R3141		ERD10TJ103	10K	1	
R3142		ERD10TJ122	1.2K	1	
R3143		ERD25TJ565	1/4W 5.6M	1	
R3144		ERD10TJ222	2.2K	1	
R3145		ERTD2FHJ332S	3.3K	1	
R3146		ERD10TJ102	1.2K	1	
R3147		ERD10TJ821	820	1	
R3148		ERD10TJ124	10K	1	
			Variable Resistors		
VR301		EVN3ACA00B13		1	
VR302		EVN3ACA00B15		1	
VR303-305		EVN3ACA00B14		3	
VR306		EVN3ACA00B15		1	
VR307,308		EVN3ACA00B14		2	
VR309		EVN3ACA00B33		1	
VR310-317		EVN3ACA00B14		8	
VR318		EVN3ACA00B33		1	
VR319		EVN3ACA00B15		1	
VR320-322		EVN3ACA00B33		3	

Ref. No.		Part No.	Part Name & Description	Pcs / Set	Remarks
VR323,324		EVN3ACA00B15		2	
VR325		EVN3ACA00B14		1	
VR326		EVN3ACA00B13		1	
VR327		EVN3ACA00B23		1	
VR328,329		EVN3ACA00B33		2	
VR330		EVN3ACA00B52		1	
			Capacitors		
C301		ECSF6E10	Tantalum 6.3V 10	1	
C302		ECQV05103JZ	Mylar 50V 0.01	1	
C303		ECSF6E10	Tantalum 6.3V 10	1	
C305		ECEA0JK470	Electrolytic 6.3V 47	1	
C306		ECCF1H390JC	Ceramic 50V 39P	1	
C307		ECSF35ER47	Tantalum 35V 0.47	1	
C308		ECEA1HK010	Electrolytic 50V 1	1	
C309,310		ECEA1CK100	Electrolytic 16V 10	2	
C311		ECSF16E6R8	Tantalum 16V 6.8	1	
C312		ECSF35ER68	Tantalum 35V 0.68	1	
C313		ECEA1CK100	Electrolytic 16V 10	1	
C314		ECCR1H391J5	Ceramic 50V 390P	1	
C316		ECCF1H820JC5	Ceramic 50V 82P	1	
C317		ECCF1H221JC5	Ceramic 50V 220P	1	
C318		ECCF1H470JC5	Ceramic 50V 470P	1	
C319		ECSF35ER47	Tantalum 35V 0.47	1	
C320		ECCF1H271JC5	Ceramic 50V 270P	1	
C321		ECSF6E10	Tantalum 6.3V 10	1	
C322		ECEA0JK470	Electrolytic 6.3V 47	1	
C323		ECEA1HKNR47	Electrolytic 50V 0.47	1	
C324		ECSF35ER47	Tantalum 35V 0.47	1	
C325		ECEA1CK100	Electrolytic 16V 10	1	
C326		ECCF1H101JC5	Ceramic 50V 100P	1	
C327		ECEA1CK100	Electrolytic 16V 10	1	
C328		ECEA0JK470	Electrolytic 6.3V 47	1	
C329		ECQV05103JZ	Mylar 50V 0.01	1	
C330		ECEA1CK100	Electrolytic 16V 10	1	
C332		ECCF1H181JC5	Ceramic 50V 180P	1	
C333		ECCF1H330JC5	Ceramic 50V 33P	1	
C334		ECEA0JK470	Electrolytic 6.3V 47	1	
C335		ECCF1H181JC5	Ceramic 50V 180P	1	
C336		ECSF6E47	Tantalum 6.3V 47	1	
C337,338		ECEA1CK100	Electrolytic 16V 10	2	
C339-342		ECCF1H820J5	Ceramic 50V 82P	4	
C343		ECCF1H270JC5	Ceramic 50V 27P	1	
C344		ECV1ZW40X53N	Trimmer 1W 40P	1	
C345,346		ECCF1H820J5	Ceramic 50V 82P	2	
C347		ECEA1CK100	Electrolytic 16V 10	1	
C348		ECSF6E47	Tantalum 6.3V 47	1	
C349		ECCF1H820J5	Ceramic 50V 82P	1	
C350		ECEA1CK100	Electrolytic 16V 10	1	
C351		ECQV05103JZ	Mylar 50V 0.01	1	
C352-354		ECCR1H680J5	Ceramic 50V 68P	3	
C355		ECCF1H270JC5	Ceramic 50V 27P	1	
C356		ECQV05103JZ	Mylar 50V 0.01	1	
C357		ECEA1CK100	Electrolytic 16V 10	1	
C358-360		ECQV05103JZ	Mylar 50V 0.01	3	
C361		ECV1ZW20X64	Trimmer 1W 20P	1	
C362,363		ECEA1HKNR47	Electrolytic 50V 0.47	2	
C364		ECKF1H103ZP	Ceramic 50V 0.01	1	
C365		ECSF10E47	Tantalum 10V 47	1	
C366		ECEA1CK100	Electrolytic 16V 10	1	
C368		ECSF10E47	Tantalum 10V 47	1	
C369		ECEA1HKR47	Electrolytic 50V 0.47	1	
C370,371		ECEA1CK100	Electrolytic 16V 10	2	
C372		ECEA0JK470	Electrolytic 6.3V 47	1	
C373		ECEA1HKNR47	Electrolytic 50V 0.47	1	
C374,375		ECEA0JK470	Electrolytic 6.3V 47	2	
C376		ECSF10E10	Tantalum 10V 10	1	
C377		ECCR1H820J5	Ceramic 50V 82P	1	
C378,379		ECEA1HK3R3	Electrolytic 50V 3.3	2	
C380,381		ECKR1H103ZF5	Ceramic 50V 0.01	2	

Ref. No.	Part No.	Part Name & Description	Pcs / Set	Remarks
C382	ECSF6E10	Tantalum 6.3V 10	1	
C383-387	ECEA1CK100	Electrolytic 16V 10	5	
C388	ECSF35ER47	Tantalum 35V 0.47	1	
C389	ECCF1H270JC5	Ceramic 50V 27P	1	
C390	ECSF35ER47	Tantalum 35V 0.47	1	
C391-393	ECEA1CK100	Electrolytic 16V 10	3	
C394	ECSF6E10	Tantalum 6.3V 10	1	
C395-397	ECEA1CK100	Electrolytic 16V 10	3	
C398	ECCF1H270JC5	Ceramic 50V 27P	1	
C399,3100	ECEA1CK100	Electrolytic 16V 10	2	
C3101	ECSF35ER47	Tantalum 35V 0.47	1	
C3102	ECEA1AN471S	Electrolytic 10V 470	1	
C3103	ECCR1H331J5	Ceramic 50V 330P	1	
C3104	ECEA1HK010	Electrolytic 50V 1	1	
C3105	ECSF35ER47	Tantalum 35V 0.47	1	
C3106	ECQV05103JZ	Mylar 50V 0.01	1	
C3108	ECCF1H151JC5	Ceramic 50V 150P	1	
C3110	ECCF1H180J	Ceramic 50V 18P	1	
C3137	ECSF6E10	Tantalum 6.3V 10	1	
		Coils		
L301	EL0606SK220K	22μH	1	
L302	EL0606SK271K	270μH	1	
L303	EL0606SK471K	470μH	1	
L304,305	EL0606SK150K	15μH	2	
L306	EL0606SK220K	22μH	1	
L307	TLT102-999G	1mH	1	
L308	EL0606SK220K	22μH	1	
L309,310	EL0606SK101K	100μH	2	
L311	ELT-7F004	100μH	1	
L312	EL0606SK330K	33μH	1	
L313,314	EL0606SK271K	270μH	2	
L315,316	EL0606SK101K	100μH	2	
		LC Filters		
LC301	ELB-5E020		1	
LC302	ELB-5F035		1	
LC303	ELB-5F036		1	
LC304	ELB-5E023		1	
LC305,306	ELB-5E022		2	
		Short Plugs		
P301	EMCS0250Z	2P	1	
P302	EMCS0850Z	8P	1	
P303,304	EMCS0550Z	5P	2	
P305	EMCS0350Z	3P	1	
P306	EMCS0250Z	2P	1	
		X'tals		
X301	VLFW0007		1	
X302	VSXK0065		1	
		Delay Lines		
DL301	EFDMN645K15E		1	
DL302	ELB-5E021		1	
DL303	EFDVN645B15A		1	
		Resistors Ass'y		
RB301	EXB-H86261J		1	
RB302	EXB-D86262J		1	

Ref. No.	Part No.	Part Name & Description	Pcs / Set	Remarks
		Miscellaneous		
	VEKW0349	Connector Ass'y 4P	1	
	VEKW0337	Connector Ass'y 4P	1	
	VEKW0351	Connector Ass'y 5P	1	
	VEKW0355	Connector Ass'y 7P	1	
	VEKW0332	Connector Ass'y 2P	1	
	VEKW0363	Lug Terminal Ass'y	1	
	VSCW0052	DL Shield Board	1	
	VXAW0013	14MHz CCD Shield Case	1	
		Ass'y		
	VSCW0051	14MHz CCD Shield Case (B)	1	
	VEKW0380	Connector Ass'y 2P	1	
	VMZW0057	14MHz CCD Fiber Sheet	1	
		DEFLECTION C.B.A.		
		Integrated Circuits		
IC601	AN6050		1	
IC602	AN374P		1	
IC603	AN6914		1	
IC604	AN6552		1	
		Transistors		
Q602	2SD636(Q,R)		1	
Q603	2SB641(Q,R)		1	
Q604	2SD636(Q,R)		1	
Q605	2SB641(Q,R)		1	
Q606	2SC1565A		1	
Q608	2SD662(Q,R)		1	
Q609	2SB641(Q,R)		1	
Q610	2SD636(Q,R)		1	
Q611	2SA1018(Q,R)		1	
Q612,613	2SD662(Q,R)		2	
Q614	2SB642(Q,R)		1	
Q615	2SD636(Q,R)		1	
Q616	2SA1018(Q,R)		1	
Q617	2SD662(Q,R)		1	
Q618	2SD636(Q,R)		1	
Q619-621	2SB641(Q,R)		3	
Q622	2SD636(Q,R)		1	
Q623	2SD662(R)		1	
Q624	2SB641(Q,R)		1	
Q625	2SD669A		1	
Q626,627	2SD636(Q,R)		2	
Q628	2SB641(S,T)		1	
Q629,630	2SD636(R,S)		2	
Q631	2SD636(Q,R)		1	

Ref. No.		Part No.	Part Name & Description	Pcs / Set	Remarks
Q632		2SB793A		1	
Q633		2SC2206(C)		1	
Q634		2SD636(Q,R)		1	
Q635		2SD973A		1	
Q636-638		2SD636(Q,R)		3	
Q639		2SD973A		1	
Q640,641		2SD661(T,U)		2	
Q6200,6201		2SA1018(Q,R)		2	
			Diodes		
D601		MA165		1	
D602		ERB28-04D		1	
D603		ES-1F		1	
D604		ERB28-04D		1	
D605		MA165		1	
D606		MA26W		1	
D607-609		MA165		3	
D610,611		S5500B		2	
D612		MZL306B		1	
D613		1S954		1	
D614		MA1100		1	
D615		OA90		1	
D616		MA165		1	
D617		MA26W		1	
D618		RD4.7E		1	
		or A02-05CD			
D619,620		S5500B		2	
D621		ERB28-04D		1	
D622		MA165		1	
D623		MZ303A		1	
			Resistors		
R601		ERD10TJ753	75K	1	
R604		ERD10TJ682	6.8K	1	
R605		ERD10TJ681	680	1	
R606		ERD10TJ222	2.2K	1	
R607		ERD10TJ390	39	1	
R608		ERD10TJ682	6.8K	1	
R609		ERO50CKF5603	560K	1	
R610		ERD10TJ224	220K	1	
R611		ERD10TJ823	82K	1	
R612		ERD10TJ102	1K	1	
R613		ERD10TJ472	4.7K	1	
R614		ERD10TJ331	330	1	
R615		ERD10TJ100	10	1	
R616		ERD10TJ103	10K	1	
R617		ERD10TJ682	6.8K	1	
R618		ERD10TJ123	12K	1	
R620		ERD10TJ334	330K	1	
R621		ERD10TJ222	2.2K	1	
R623		ERD10TJ472	4.7K	1	
R624		ERD10TJ223	22K	1	
R625		ERD10TJ102	1K	1	
R626		ERD10TJ470	47	1	
R627,628		ERD10TJ224	220K	2	
R634		ERD10TJ682	6.8K	1	
R635		ERD10TJ182	1.8K	1	
R636		ERD10TJ682	6.8K	1	
R637		ERD10TJ392	3.9K	1	
R638		ERD10TJ682	6.8K	1	
R639		ERD10TJ822	8.2K	1	
R640		ERD10TJ182	1.8K	1	
R641		ERD10TJ473	47K	1	
R642,643		ERD10TJ333	33K	2	
R644		ERD10TJ472	4.7K	1	
R645-647		ERD10TJ103	10K	3	

Ref. No.		Part No.	Part Name & Description	Pcs / Set	Remarks
R648		ERD10TJ222	2.2K	1	
R649-656		ERD10TJ154	150K	8	
R657		ERD10TJ472	4.7K	1	
R658		ERD10TJ333	33K	1	
R659,660		ERD10TJ472	4.7K	2	
R661		ERD10TJ223	22K	1	
R662		ERD10TJ102	1K	1	
R663		ERD10TJ223	22K	1	
R664		ERD10TJ273	27K	1	
R665		ERD10TJ822	8.2K	1	
R666		ERD10TJ272	2.7K	1	
R667		ERD10TJ223	22K	1	
R668		ERD10TJ472	4.7K	1	
R669		ERD10TJ183	18K	1	
R671		ERD10TJ562	5.6K	1	
R672		ERD10TJ102	1K	1	
R673		ERD10TJ223	22K	1	
R674		ERD10TJ221	220	1	
R675		ERD10TJ220	22	1	
R676		ERD10TJ101	100	1	
R677		ERD10TJ104	100K	1	
R678		ERD10TJ560	56	1	
R679		ERD10TJ332	3.3K	1	
R680		ERD10TJ472	4.7K	1	
R681		ERD10TJ152	1.5K	1	
R682		ERD10TJ124	120K	1	
R683		ERD10TJ392	3.9K	1	
R684		ERD10TJ104	100K	1	
R685		ERD10TJ103	10K	1	
R686		ERG1ANJ330	1W 33	1	
R687		ERG1ANJ820	1W 82	1	
R688		ERD10TJ562	5.6K	1	
R689		ERD10TJ682	6.8K	1	
R690		ERD10TJ222	2.2K	1	
R691		ERD10TJ562	5.6K	1	
R692		ERD10TJ392	3.9K	1	
R693		ERD10TJ562	5.6K	1	
R694		ERD10TJ823	82K	1	
R695		ERDS2TJ471	1/4W 470	1	
R696		ERD10TJ223	22K	1	
R697		ERD10TJ562	5.6K	1	
R698		ERD10TJ103	10K	1	
R699		ERD10TJ823	82K	1	
R6100		ERD10TJ101	100	1	
R6101		ERD10TJ332	3.3K	1	
R6102		ERD10TJ561	560	1	
R6103		ERD10TJ152	1.5K	1	
R6104		ERD10TJ681	680	1	
R6105		ERD10TJ223	22K	1	
R6106		ERD10TJ100	10	1	
R6107		ERD10TJ562	5.6K	1	
R6108		ERD10TJ122	1.2K	1	
R6109		ERD10TJ333	33K	1	
R6110		ERD10TJ181	180	1	
R6111		ERD10TJ472	4.7K	1	
R6112		ERD10TJ152	1.5K	1	
R6113		ERD10TJ562	5.6K	1	
R6114		ERD10TJ222	2.2K	1	
R6115		ERD10TJ223	22K	1	
R6116		ERD10TJ334	330K	1	
R6117		ERD10TJ223	22K	1	
R6118		ERDS2TJ471	1/4W 470	1	
R6119		ERD10TJ273	27K	1	
R6120		ERD10TJ102	1K	1	
R6121		ERD10TJ273	27K	1	
R6122		ERDS2TJ222	1/4W 2.2K	1	
R6123		ERO10CKF1002	10K	1	
R6124		ERO10CKF3302	33K	1	
R6125		ERD10TJ222	2.2K	1	
R6126		ERD10TJ224	220K	1	

Ref. No.	Part No.	Part Name & Description	Pcs / Set	Remarks
R6127	ERD10TJ221	220	1	
R6128	ERD10TJ562	5.6K	1	
R6129	ERD10TJ104	100K	1	
R6130	ERD10TJ333	33K	1	
R6131	ERD10TJ332	3.3K	1	
R6132	ERD10TJ223	22K	1	
R6133	ERD10TJ104	100K	1	
R6134	ERD10TJ223	22K	1	
R6135	ERD10TJ100	10	1	
R6136	ERD10TJ102	1K	1	
R6137	ER010CKF1001	1K	1	
R6200	ERD10TJ471	470	1	
R6201	ERD10TJ682	6.8K	1	
R6202,6203	ERD10TJ102	1K	2	
R6204	ERD10TJ123	12K	1	
R6205	ERD10TJ273	27K	1	
		Variable Resistors		
VR601	EVM3AGA00B16	1M	1	
VR602	EVM3AGA00B35	300K	1	
VR603	EVN3ACA00B34	30K	1	
VR604	EVM3AGA00B16	1M	1	
VR605	EVM3AGA00B55	500K	1	
VR606	EVN3ACA00B34	30K	1	
VR607,608	EVN-3ACA00B14	10K	2	
VR609-612	EVN3ACA00B53	5K	4	
VR613-620	EVN3ACA00B15	100K	8	
VR621	EVN3ACA00B33	3K	1	
VR622	EVM3AGA00B12	100	1	
VR623	EVN3ACA00B34	30K	1	
VR624	EVN3ACA00B33	3K	1	
VR625	EVN3ACA00B13	1K	1	
VR6200	EVN3ACA00B14	10K	1	
		Capacitors		
C601	ECEA2AS010	Electrolytic 100V 1	1	
C602	ECQM1H222MZ	Mylar 50V 0.0022	1	
C603	ECSF10E10	Tantalum 10V 10	1	
C604	ECCR1H271J5	Ceramic 50V 270P	1	
C605	ECQV05154JZ	Mylar 50V 0.15	1	
C606	ECEA1AK330	Electrolytic 10V 33	1	
C607	ECEA1AK470	Electrolytic 10V 47	1	
C608	ECQM1H472MZ	Mylar 50V 0.0047	1	
C609	ECSF35E2R2	Tantalum 35V 2.2	1	
C610	ECEA1ASS221	Electrolytic 10V 220	1	
C611	ECQM1H103MZ	Mylar 50V 0.01	1	
C612	ECEA1AK470	Electrolytic 10V 47	1	
C613	ECQF6152KZ	Mylar 630V 0.0015	1	
C614,615	ECEA1CK100	Electrolytic 16V 10	2	
C616	ECQM1H272MZ	Mylar 50V 0.0027	1	
C617	ECSF10E47	Tantalum 10V 47	1	
C618	ECQM1H472MZ	Mylar 50V 0.0047	1	
C619	ECQM1H102MZ	Mylar 50V 0.001	1	
C620	ECEA1CK100	Electrolytic 16V 10	1	
C622	ECQE10472MV	Mylar 1KV 0.0047	1	
C623	ECEA1HK100	Electrolytic 50V 10	1	
C624	ECEA2WS010	Electrolytic 450V 1	1	
C625	ECQM4472MZ	Mylar 400V 0.0047	1	
C626,627	ECEA2CS010	Electrolytic 160V 1	2	
C629	ECEA1HK010	Electrolytic 50V 1	1	
C630	ECEA1ASS101	Electrolytic 10V 100	1	
C631-633	ECEA1CK100	Electrolytic 16V 10	3	
C634	ECEA1ASS101	Electrolytic 10V 100	1	
C635	ECQE4473MZ	Mylar 400V 0.047	1	
C636	ECEA2AS010	Electrolytic 100V 1	1	
C637	ECEA1CK100	Electrolytic 16V 10	1	
C638	ECQF6152KZ	Mylar 630V 0.0015	1	
C639	ECEA1AK470	Electrolytic 10V 47	1	
C640	ECEA1HN3R3	Electrolytic 50V 3.3	1	

Ref. No.	Part No.	Part Name & Description	Pcs / Set	Remarks
C641	ECQM4472MZ	Mylar 400V 0.0047	1	
C642	ECCR1H101J5	Ceramic 50V 100P	1	
C643	ECEA1HK3R3	Electrolytic 50V 3.3	1	
C644	ECCR1H391J5	Ceramic 50V 390P	1	
C645	ECKR1H102KB5	Ceramic 50V 1000P	1	
C646	ECCR1H121J5	Ceramic 50V 120P	1	
C647	ECEA1ASS101	Electrolytic 10V 100	1	
C648	ECQP1331JZ	Mylar 100V 330P	1	
C649	ECQM1H102MZ	Mylar 50V 0.001	1	
C650	ECSF6E68	Tantalum 6.3V 68	1	
C651	ECQM1H472MZ	Mylar 50V 0.0047	1	
C652	ECKF1H561KB	Ceramic 50V 560P	1	
C653	ECCR1H181J5	Ceramic 50V 180P	1	
C654,655	ECEA1HK010	Electrolytic 50V 1	2	
C656	ECQV05563JZ	Mylar 50V 0.056	1	
C657	ECKF1H561KB	Ceramic 50V 560P	1	
C658	ECSF10E47	Tantalum 10V 47	1	
C659	ECEA1ASS221	Electrolytic 10V 220	1	
C660	ECCR1H221J5	Ceramic 50V 220P	1	
C661	ECEA1HK010	Electrolytic 50V 1	1	
C662	ECEA1ESS470	Electrolytic 25V 47	1	
C663	ECEA1ASS471	Electrolytic 10V 470	1	
C664	ECSF10E47	Tantalum 10V 47	1	
C665	ECSF10E10	Tantalum 10V 10	1	
C666	ECEA1CK100	Electrolytic 16V 10	1	
C667	ECKF1H561KB	Ceramic 50V 560P	1	
C668	ECEA1ESS470	Electrolytic 25V 47	1	
C669	ECEA1HKR47	Electrolytic 50V 0.47	1	
C670	ECEA1CK220	Electrolytic 16V 22	1	
C671	ECEA1ASS101	Electrolytic 10V 100	1	
C672	ECSF35E2R2	Tantalum 35V 2.2	1	
C674	ECEA1ASS101	Electrolytic 10V 100	1	
C676	ECQM1H472MZ	Mylar 50V 0.0047	1	
C677	ECEA0JK330	Electrolytic 6.3V 33	1	
C678	ECEA1HKN010	Electrolytic 50V 1	1	
C679,680	ECSF16FR47	Tantalum 16V 0.47	2	
C6200	ECQV05104JZ	Mylar 50V 0.1	1	
C6201	ECCR1H101J5	Ceramic 50V 100P	1	
C6202	ECQE1104KN	Mylar 100V 0.1	1	
C6203	ECKR1H103ZF5	Ceramic 50V 0.01	1	
		Coils		
L601	VLQ7H101K	100μH	1	
L602	VLQ7H101K	100μH	1	
L603	VLQ9H333J	33mH	1	
L604	VLQ7H101K	100μH	1	
L605	FL9H501K-23	500μH	1	
L606	VLQ9H333J	33mH	1	
		Short Plugs		
P601	EMCS0350Z	3P	1	
P602	EMCS0650Z	6P	1	
P603	EMCS0450Z	4P	1	
P604	EMCS0250Z	2P	1	
P605	EMCS0350Z	3P	1	
P606	EMCS0250Z	2P	1	
P607	EMCS0350Z	3P	1	
P608	EMCS0350Z	3P	1	
P609	EMCS0650Z	6P	1	
P610,611	EMCS0550Z	5P	2	
P612	EMCS0450Z	4P	1	
P613	EMCS0750Z	7P	1	
P614	EMCS0450Z	4P	1	
P615-617	EMCS0250Z	2P	3	

Ref. No.	Part No.	Part Name & Description	Pcs / Set	Remarks
		Miscellaneous		
F601	XBA1H16N0100	Fuse	1	
T601	TLF69955	F.B.T	1	
SW601	VSSW0019	Mode Selection SW	1	
	VEKW0095	Lug Terminal Ass'y	1	
	VSCW0049	AVR Shield Case	1	
	VEKW0381	2P Connector Ass'y	1	
		REAR SIDE C.B.A.		
		Resistor		
R501	ERDS2TJ560	1/4W 56	1	
		Miscellaneous		
SW501	ESD-32166	Stand By SW	1	
	VEKW0330	Connector Ass'y 3P	1	
	VEKW0341	Connector Ass'y 5P	1	
	VEKW0339	Connector Ass'y 3P	1	
SW502	ESD-14194	Nega-Posi Reverse SW	1	
		REMO. CON. SW C.B.A.		
	VEKW0338	Connector Ass'y 2P	1	
	VSSW0023	Remo. Con. SW	1	
		POWER ZOOM SW A C.B.A.		
		Transistors		
Q801-804	2SD636(Q,R,S)		4	
		Resistors		
R801	ERD10TJ561	560	1	
R802	ERD10TJ560	56	1	
R803,804	ERD10TJ103	10K	2	
R805,806	ERD10TJ822	8.2K	2	
		Variable Resistor		
VR801	EVJFDAF20B53	5K	1	
		Capacitor		
C801	ECEA1ASS221	Electrolytic 10V 220	1	
		Short Plug		
P801	EMCS0250Z	2P	1	
		Switch		
SW801	VSSW0022	Power Zoom SW	1	

Ref. No.	Part No.	Part Name & Description	Pcs / Set	Remarks
		Miscellaneous		
	VEKW0335	Connector Ass'y 2P	1	
	VEKW0334	Connector Ass'y 2P	1	
		POWER ZOOM SW B C.B.A.		
	VEKW0357	Connector Ass'y 2P	1	
	VSSW0022	Power Zoom SW	1	
		FRONT C.B.A.		
		Variable Resistor		
VR802	EFDFEAF20B24		1	
		Miscellaneous		
	VEKW0352	Connector Ass'y 5P	1	
	VSSW0023	A.W.C. SW	1	
		SPECIAL TUBE SOCKET C.B.A.		
		Resistor		
R619	ERD25TJ105	1/4W 1M	1	
		Capacitor		
C621	ECQE16682N67	Mylar 1.6KV 0.0068	1	
		Miscellaneous		
	VJSK1116	Special Tube Socket	1	
	VEKW0360	Camera Cable Ass'y	1	
	VEKW0348	10P Socket Ass'y	1	
	VEKW0358	Connector Ass'y 2P	1	
	VEKW0367	Power Transistor Ass'y	1	
	ECKX2H102ZE	Ceramic 500V 1000P	1	
	VEKW0365	Motor Ass'y	1	
	ELY-18A208D	DY Ass'y	1	
	K4103	Special Tube	1	

Ref. No.		Part No.	Part Name & Description	Pcs / Set	Remarks
			CAMERA REMO. CON. H C.B.A.		
			Integrated Circuits		
IC701		EHM-K046W66K	Hi-Mic	1	
IC702		MN1227A		1	
			Transistors		
Q701		2SB709		1	
Q702,703		2SC2404		2	
Q704-708		2SB709		5	
Q709,710		2SD601		2	
			Diode		
D701		OA90		1	
			Resistors		
R701		ERJ8GCJ273	Chip 27K	1	
R702		ERJ8GCJ182	Chip 1.8K	1	
R703		ERJ8GCJ121	Chip 120	1	
R704		ERJ8GCJ102	Chip 1K	1	
R705		ERJ8GCJ100	Chip 10	1	
R706		ERJ8GCJ222	Chip 2.2K	1	
R707		ERO10CKF1203	120K	1	
R708		ERJ8GCJ103	Chip 10K	1	
R709		ERO10CKF4702	47K	1	
R710		ERO10CKF2202	22K	1	
R711		ERJ8GCJ103	Chip 10K	1	
R712		ERO10CKF2202	22K	1	
R713		ERO10CKF5602	56K	1	
R714		ERJ8GCJ102	Chip 1K	1	
R715		ERJ8GCJ153	Chip 15K	1	
R716		ERJ8GCJ562	Chip 5.6K	1	
R717		ERJ8GCJ103	Chip 10K	1	
R718		ERJ8GCJ472	Chip 4.7K	1	
R719		ERJ8GCJ103	Chip 10K	1	
R720		ERJ8GCJ472	Chip 4.7K	1	
R721		ERJ8GCJ153	Chip 15K	1	
R722		ERJ8GCJ151	Chip 150	1	
R723		ERJ8GCJ394	Chip 390K	1	
R724-726		ERJ8GCJ103	Chip 10K	3	
R727-735		ERJ8GCJ102	Chip 1K	9	
			Variable Resistor		
VR701		EVN3ACA00B53	5K	1	
			Capacitors		
C701		ECEA1CN10U	Electrolytic 16V 10	1	
C702		ECEA1HK3R3	Electrolytic 50V 3.3	1	
C703,704		ECUV1H103ZFM	Chip Ceramic 50V 0.01	2	
C705		ECUV1H470JM	Chip Ceramic 50V 47P	1	
C706		ECEA1HKR47	Electrolytic 50V 0.47	1	
C707		ECSF10E10	Tantalum 10V 10	1	
C708		ECSF6E47	Tantalum 6.3V 47	1	
C709		ECSF10E47	Tantalum 10V 47	1	
			Coil		
L701		ELO606SK101K	100μH	1	

Ref. No.		Part No.	Part Name & Description	Pcs / Set	Remarks
			CAMERA REMO. CON. M C.B.A.		
			Integrated Circuits		
IC703		μPD7507G51400	L.S.I.	1	
IC704		NJM2903M		1	
			Transistors		
Q711		2SC2404		1	
Q712		2SB709		1	
Q713		2SD601		1	
Q714		2SD601A		1	
Q715,716		2SD601		2	
			Diodes		
D702-706		MA151K		5	
D707		MA151A		1	
D708		MA151K		1	
D709		MA151A		1	
D710		MA151K		1	
D711,712		MA151A		2	
			Resistors		
R736		ERJ8GCJ104	Chip 100K	1	
R737		ERJ8GCJ563	Chip 56K	1	
R738		ERJ8GCJ102	Chip 1K	1	
R739,740		ERJ8GCJ563	Chip 56K	2	
R741-743		ERJ8GCJ102	Chip 1K	3	
R744-747		ERJ8GCJ563	Chip 56K	4	
R748		ERJ8GCJ101	Chip 100	1	
R749-751		ERJ8GCJ103	Chip 10K	3	
R752		ERJ8GCJ223	Chip 22K	1	
R753,754		ERJ8GCJ222	Chip 2.2K	2	
R755		ERJ8GCJ104	Chip 100K	1	
R756		ERD10TJ272	2.7K	1	
R757		ERJ8GCJ224	Chip 220K	1	
R758		ERJ8GCJ222	Chip 2.2K	1	
R759		ERJ8GCJ103	Chip 10K	1	
R760		ERJ8GCJ222	Chip 2.2K	1	
R762		ERJ8GCJ472	Chip 4.7K	1	
R763,764		ERJ8GCJ473	Chip 47K	2	
R765		ERJ8GCJ224	Chip 220K	1	
R766		ERO10CKF2403	240K	1	
R767		ERJ8GCJ103	Chip 10K	1	
R768,769		ERJ8GCJ223	Chip 22K	2	
R770		ERJ8GCJ563	Chip 56K	1	
R771		ERJ8GCJ104	Chip 100K	1	
R772		ERJ8GCJ223	Chip 22K	1	
R773		ERJ8GCJ563	Chip 56K	1	
R779		ERJ8GCJ222	Chip 2.2K	1	
			Capacitors		
C710,711		ECU-V1H330JM	Chip Ceramic 50V 33P	2	
C712		ECU-V1H101JM	Chip Ceramic 50V 100P	1	
C713		ECCF1H270JU	Ceramic 50V 27P	1	
C714		ECEA0JK470	Electrolytic 6.3V 47	1	
			X'tal		
X701		VSXW0006		1	

Ref. No.		Part No.	Part Name & Description	Pcs / Set	Remarks
			CAMERA REMO. CON. S C.B.A.		
			Diodes		
D713		MA151WA	Chip	1	
D714		MA151K	Chip	1	
D715		MA151WA	Chip	1	
D716		MA151K	Chip	1	
			Resistors		
R774-777		ERJ8GCJ102	Chip 1K	4	
R778		ERJ8GCJ563	56K	1	
			Miscellaneous		
		EVQ-QS107K	Display SW	1	
		EVQ-QS107K	P/P SW	1	
		EVQ-QS107K	Rev. SW	1	
		VSSW0021	Title Selection SW	1	
		EVQ-QS107K	Insert SW	1	
		VSSW0020	Fade Selection SW	1	
		VSSW0025	VTR/CAMERA Selection SW	1	
		EVQ-QS107K	Slow SW	1	
		EVQ-QS107K	Cue SW	1	
			CAMERA REMO. CON. ETC.		
		VEKW0372	PC Joiner (C)	1	
		VEKW0336	Connector Ass'y 2P	1	
		VEKW0342	Connector Ass'y 3P	1	
		VEKW0350	Connector Ass'y 5P	1	
		VEKW0354	Connector Ass'y 8P	1	
		VEKW0364	EXT. Mic Socket Ass'y	1	
		VSCW0054	Shield Case (A)	1	
		VSCW0055	Shield Case (B)	1	
		VMZW0061	Fiber Sheet (A)	1	
		VMZW0062	Fiber Sheet (B)	1	
		VMZW0063	Fiber Sheet (C)	1	
		VEKW0344	Connector Ass'y 5P	1	
		VEKW0373	PC Joiner (D)	1	
		VEKW0371	PC Joiner (B)	1	
		VEKW0370	PC Joiner (A)	1	

Ref. No.		Part No.	Part Name & Description	Pcs / Set	Remarks
			EVF C.B.A.		
			Integrated Circuit		
IC901		AN374P		1	
			Transistors		
Q901		2SD601		1	
Q902		2SD662(Q,R)		1	
Q903		2SB709A		1	
Q904		2SD601A		1	
Q905		3SF11(Q)		1	
Q906		2SB709A		1	
Q907		2SC2295		1	
Q908		2SD968		1	
Q9100-9102		2SD601		3	
			Diodes		
D901-905		MA165		5	
D907		S1B01-01		1	
D909		S1B01-01		1	
D913		BR5704S		1	
			Resistors		
R901		ERJ8GCJ683	Chip 68K	1	
R902		ERJ8GCJ153	Chip 15K	1	
R903		ERJ8GCJ222	Chip 2.2K	1	
R904		ERJ8GCJ391	Chip 390	1	
R905		ERJ8GCJ561	Chip 560	1	
R906		ERJ8GCJ333	Chip 33K	1	
R907		ERJ8GCJ562	Chip 5.6K	1	
R908		ERJ8GCJ102	Chip 1K	1	
R909		ERJ8GCJ183	Chip 18K	1	
R911		ERJ8GCJ151	Chip 150	1	
R912		ERJ8GCJ334	Chip 330K	1	
R913		ERJ8GCJ391	Chip 390	1	
R915		ERJ8GCJ153	Chip 15K	1	
R916		ERJ8GCJ332	Chip 3.3K	1	
R917		ERJ8GCJ223	Chip 22K	1	
R918		ERJ8GCJ472	Chip 4.7K	1	
R919		ERJ8GCJ683	Chip 68K	1	
R920		ERJ8GCJ101	Chip 100	1	
R921		ERJ8GCJ102	Chip 1K	1	
R922,923		ERJ8GCJ334	Chip 330K	2	
R924		ERJ8GCJ562	Chip 5.6K	1	
R925		ERJ8GCJ223	Chip 22K	1	
R926		ERJ8GCJ333	Chip 33K	1	
R927		ERJ8GCJ153	Chip 15K	1	
R928		ERJ8GCJ822	Chip 8.2K	1	
R929		ERJ8GCJ103	Chip 10K	1	
R930		ERJ8GCJ223	Chip 22K	1	
R931		ERJ8GCJ2R7	Chip 2.7	1	
R932		ERJ8GCJ102	Chip 1K	1	
R933		ERJ8GCJ272	Chip 2.7K	1	
R934		ERJ8GCJ563	Chip 56K	1	
R935		ERJ8GCJ123	Chip 12K	1	
R936		ERJ8GCJ391	Chip 390	1	
R937		ERJ8GCJ222	Chip 2.2K	1	
R938		ERJ8GCJ821	Chip 820	1	
R939		ERJ8GCJ223	Chip 22K	1	
R940		ERJ8GCJ270	Chip 27	1	
R941		ERJ8GCJ331	Chip 330	1	
R942,943		ERJ8GCJ102	Chip 1K	2	
R945		ERJ8GCJ102	Chip 1K	1	

Ref. No.		Part No.	Part Name & Description	Pcs / Set	Remarks
R946		ERDS2TJ273	1/4W 27K	1	
R949		ERDS2TJ125	1/4W 1.2M	1	
R950		ERJ8GCJ152	Chip 1.5K	1	
R951		ERJ8GCJ105	Chip 1M	1	
R952		ERJ8GCJ334	Chip 330K	1	
R953		ERJ8GCJ220	Chip 22	1	
R954		ERJ8GCJ563	Chip 56K	1	
R955		ERJ8GCJ221	Chip 220	1	
R956		ERJ8GCJ561	Chip 560	1	
R957		ERD25VJ335	1/4W 3.3M	1	
R958		ERJ8GCJ474	Chip 470K	1	
R9100		ERJ8GCJ471	Chip 470	1	
R9101		ERJ8GCJ102	Chip 1K	1	
R9102,9103		ERJ8GCJ823	Chip 82K	2	
R9104		ERJ8GCJ102	Chip 1K	1	
R9105		ERJ8GCJ562	Chip 5.6K	1	
R9106		ERJ8GCJ152	Chip 1.5K	1	
			Variable Resistors		
VR902		EVN3ACA00B52	500	1	
VR903,904		EVM7AGA00B26	2M	2	
			Capacitors		
C901		ECEA1ASS101	Electrolytic 10V 100	1	
C902		ECEA1CN10U	Electrolytic 16V 10	1	
C903		ECUV1H271JM	Chip Ceramic 50V 270P	1	
C905		ECEA1AK470	Electrolytic 10V 47	1	
C906		ECUV1H331JM	Chip Ceramic 50V 330P	1	
C907		ECEA1HK3R3	Electrolytic 50V 3.3	1	
C908		ECUV1H103ZFM	Chip Ceramic 50V 0.01	1	
C909		ECEA1HKNR47	Electrolytic 50V 0.47	1	
C910		ECEA1AK330	Electrolytic 10V 33	1	
C911		ECUV1H100JM	Chip Ceramic 50V 10P	1	
C912		ECEA1JS220	Electrolytic 63V 22	1	
C913		ECEA1CSS471	Electrolytic 16V 470	1	
C914		ECSF10E2R2	Tantalum 10V 2.2	1	
C915		ECSF10E10	Tantalum 10V 10	1	
C916		ECUV1H103ZFM	Chip Ceramic 50V 0.01	1	
C917		ECEA1HK3R3	Electrolytic 50V 3.3	1	
C918		ECEA0JS102S	Electrolytic 6.3V 1000	1	
C919		ECUV1H272KBM	Chip Ceramic 50V 2700P	1	
C920		ECUV1H103ZFM	Chip Ceramic 50V 0.01	1	
C921		ECEA1HK3R3	Electrolytic 50V 3.3	1	
C922		ECQV05223JZ	Mylar 50V 0.022	1	
C923		ECQV05154JZ	Mylar 50V 0.15	1	
C925		VCAMS100V392J	Mylar 100V 0.0039	1	
C926		ECEA1CSS471	Electrolytic 16V 470	1	
C928		ECQE1104KN	Mylar 100V 0.1	1	
C929		ECKD3A392KB	Ceramic 1KV 0.0039	1	
C930		ECQE2104KS	Mylar 200V 0.1	1	
C931		ECKD3A152KB	Ceramic 1KV 0.0015	1	
C932		ECQE2104KS	Mylar 200V 0.1	1	
C933		ECUV1H473JM	Chip Ceramic 50V 0.047	1	
C934		ECEA1JS100	Electrolytic 63V 10	1	
C9100		ECEA1CK100	Electrolytic 16V 10	1	
C9101,9102		ECEA1HK010	Electrolytic 50V 1	2	
			Coils		
L902		KLH-11A	Linearity Coil	1	
L903		VLQ7H101K	100μH	1	
L904		VLQ9H391K	390μH	1	
L905		TLH6307-1		1	

Ref. No.		Part No.	Part Name & Description	Pcs / Set	Remarks
			Short Plugs		
P901		EMCS0350Z	3P	1	
P902		EMCS0550Z	5P	1	
P903		EMCS0450Z	4P	1	
P904		EMCS0650Z	6P	1	
P905		EMCS0250Z	2P	1	
			F.B.T.		
T901		TLF69954 or		1	
		ETF-19L1A			
			Switch		
SW901		VSSW0026	R.L Selection SW	1	
			Miscellaneous		
		VEKW0379	CRT Socket Ass'y	1	
			EVF-LED C.B.A.		
			Diodes		
D911		TLG124A	Tally	1	
D912		TLRG101	A.W.C.	1	
D920		TL0124	Under	1	
			Miscellaneous		
		VEKW0374	Connector Ass'y 6P	1	
		VXFW0009	LED Spacer Ass'y	1	
		VEKW0378	Ground Spring Ass'y	1	
			EVF (ETC.) C.B.A.		
		30DB4	CRT	1	
		VXMW0023	Int. Mic Ass'y	1	
		ELY-10V001A	DY Ass'y	1	
		VEKW0359	10P Cable Ass'y	1	
		VEKW0387	Tally LED Ass'y	1	
			BIAS LIGHT A C.B.A.		
		PG2222SX	Bias Light	3	
			BIAS LIGHT B C.B.A.		
		PG2222SX	Bias Light	3	

❶ *Power Supply Unit Section (optional accessory)*

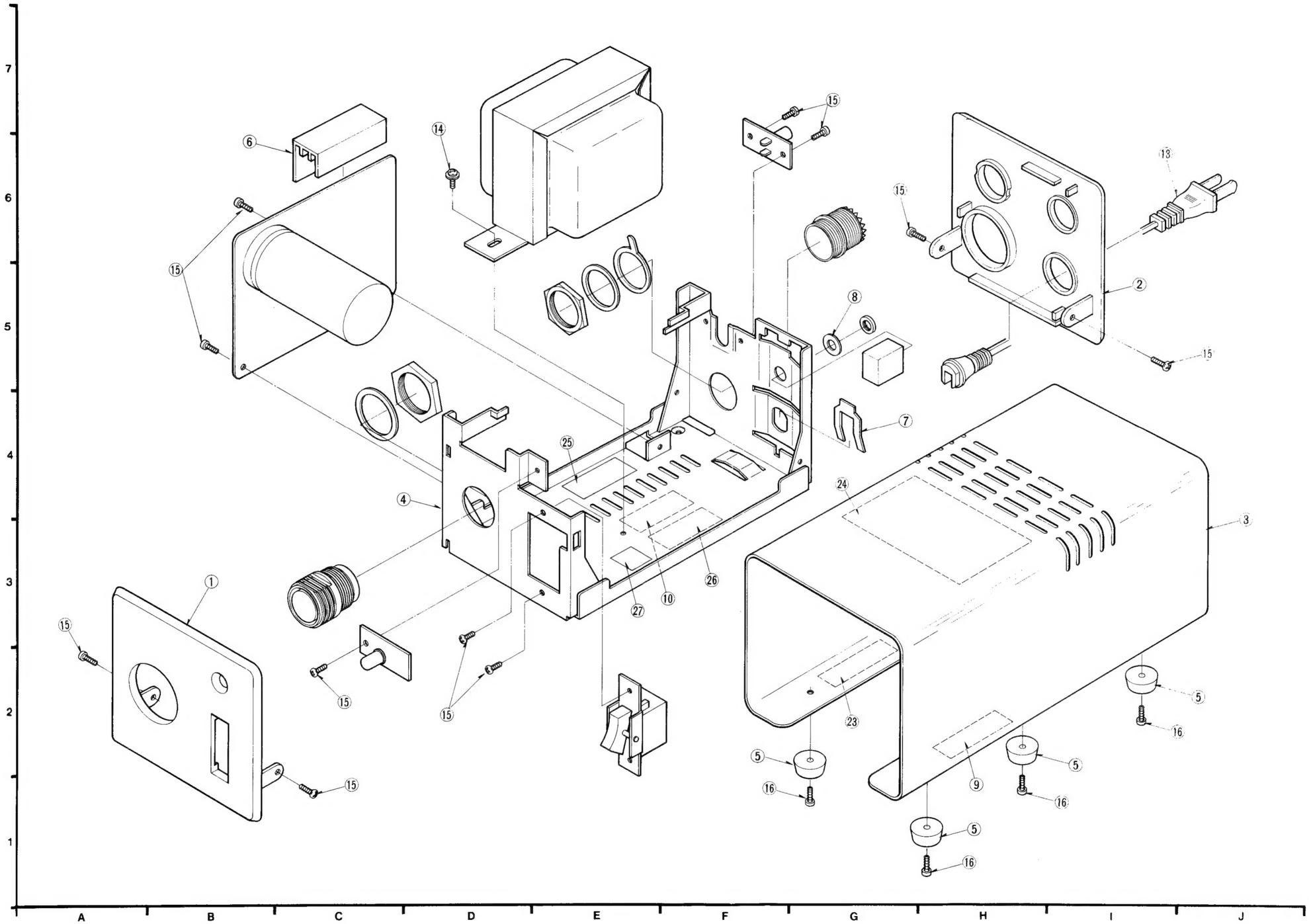

❷ Packing Parts Section

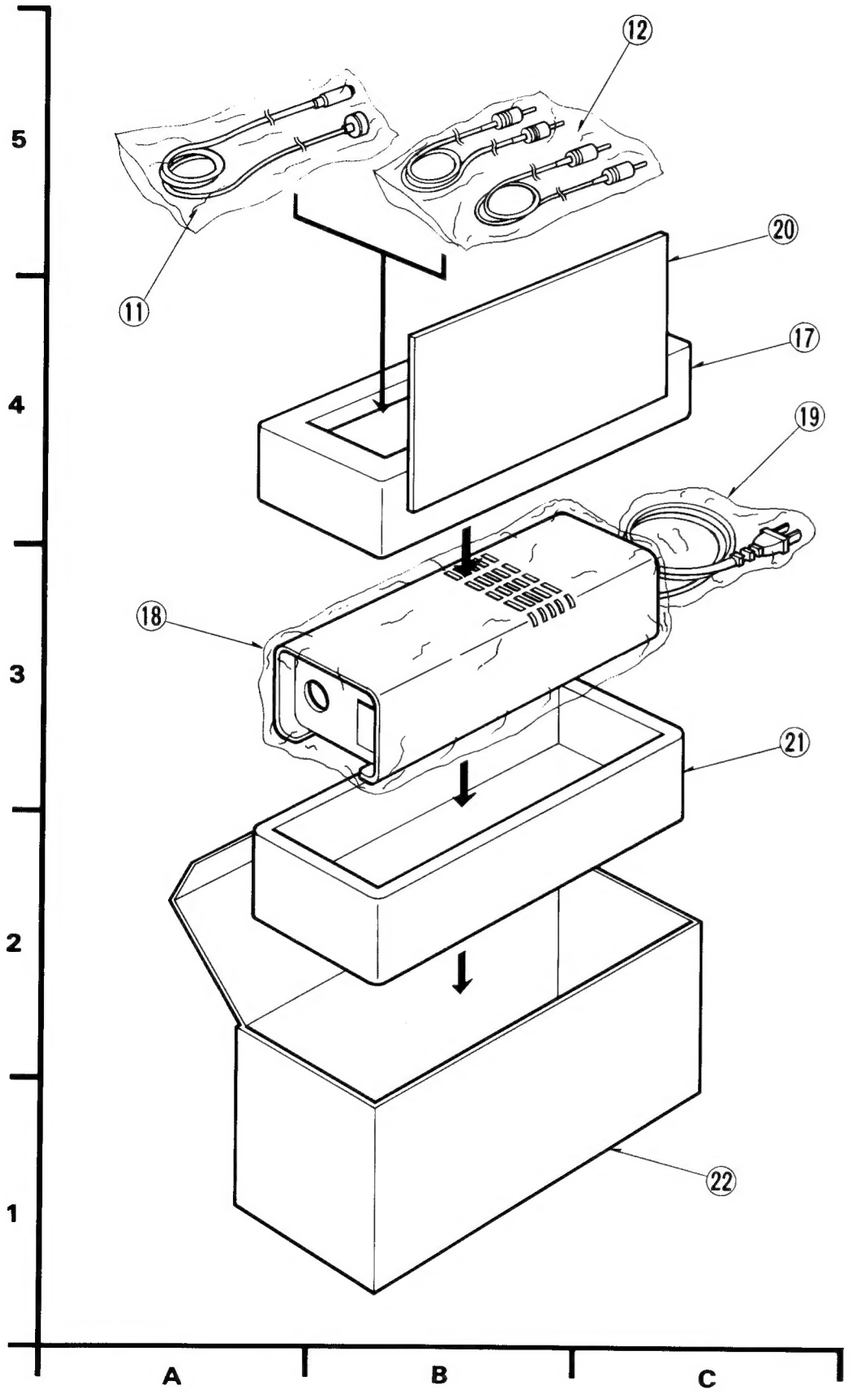

Mechanical Replacement Parts List

Note: *Be sure to make your orders of replacement parts according to this list.
○ . . . . Available replacement part
X . . . . Not available as replacement
□ . . . . Only available on special order

Item No.	Drawing No.	Description	Pcs/ Set	Availa-bility	Part No.	Remark
		PSU				
1		PSU FRONT COVER	1	o	VKGW0004	
2		BACK COVER	1	o	VKGW0091	
3		TOP COVER	1	o	VKGW0177	
4		MAIN CHASSIS	1	o	VMKW0001	
5		RUBBER LUG	4	o	VKAW0001	
6		FUSE COVER	1	o	VJFW0001	
7		AC CORD PLATE	1	o	VMAW0018	
8		WASHER	1	o	VMKW0006	
		LABEL				
9		PSU CAUTION LABEL	1	o	VQLW0196	
10		PSU LABEL	1	o	VQLW0120	
		CABLE				
11		VIDEO CABLE ASS'Y	1	o	VFAK0006	
12		AUDIO REMO.CON. CABLE ASS'Y	1	o	VFAK0005	
13		AC CORD	1	o	VJAW0004	
		SCREW				
14		PAN HEAD SCREW WITH SPRING	1	o	XYN4+F6FU	
		PLATE 3ϕ x 8 mm				
15		BIND TAPPING SCREW	11	o	XTB3+6FFU	
		3ϕ x 6 mm				
16		BIND SCREW 3ϕ x 8 mm	4	o	XSB3+8FZ	
		PACKING				
17		CUSHION TOP	1	o	VPGW0006	
18		POLY BAG FOR PSU	1	o	XZB17X27A02	
19		POLY BAG FOR PSU CORD	2	o	XZB10X22A05	
20		OPERATING INSTRUCTIONS	1	o	VQTW0043	
21		CUSHION BOTTOM	1	o	VPGW0007	
22		PSU PACKING CASE	1	o	VPKW0142	
		LABEL				
23		ATTENTION LABEL	1	o	VQLW0001	
24		SERVICEMAN W LABEL	1	o	VQLW0005	
25		FUSE LABEL (CAUTION)	1	o	VQLW0004	
26		FUSE LABEL (ATTENTION)	1	o	VQLW0003	
27		PSU CHASSIS LABEL	1	o	VQLW0074	

Electrical Replacement Parts List

Note:
1. Be sure to make your orders of replacement parts according to this list.
2. IMPORTANT SAFETY NOTICE
   Components identified by shade have special characteristics important for safety. When replacing any of these components, use only the original ones.
3. Unless otherwise specified:
   All resistors are in OHMS (Ω), 1/8 w, ±5% carbon, K=1,000Ω, M=1,000KΩ.
   All capacitors are in MICROFARADS (μF), ±10% P=μμF.
   All coils are in MICROHENRIES (μH), m=10μ.
4. C.B.A: Circuit Board Assembly.
5. C.B: Circuit Board.

Ref. No.	Part No.	Part Name & Description	Pcs / Set	Remarks
		Power Supply C.B.A.		
		Capacitor		
C105	ECET25R103SW	25V 4700	1	
		Diodes		
D101	M1-152		1	
D102	M1-152R		1	
D103	LN21RP-TV		1	
	or LN21RPH-TV			
		Resistor		
R101	ERD12TJ561	1/2W 560	1	
F101	XBA1F08NU14A	Fuse 12V 0.8A	1	
	VSEW0022	Power SW	1	
	VJJK0037	Remo. Con. Socket	1	
	VEKW0157	10 Pin Connector	1	
	STP57RUZ38	Power Transformer	1	
	TJC6319	Fuse Holder	2	